SECTION FAX
FRONT AXLE

CONTENTS

SYMPTOM DIAGNOSIS 2

NOISE, VIBRATION AND HARSHNESS (NVH) TROUBLESHOOTING 2
NVH Troubleshooting Chart 2

PRECAUTION 3

PRECAUTIONS 3
Precaution for Supplemental Restraint System (SRS) "AIR BAG" and "SEAT BELT PRE-TENSIONER" 3
Precautions for Drive Shaft 3
Precautions for Removing of Battery Terminal 4

PREPARATION 5

PREPARATION 5
Special Service Tool 5
Commercial Service Tool 5

PERIODIC MAINTENANCE 7

FRONT WHEEL HUB AND KNUCKLE 7
Inspection 7

FRONT DRIVE SHAFT 8
Inspection 8

REMOVAL AND INSTALLATION 9

FRONT WHEEL HUB AND KNUCKLE 9
Exploded View 9
Removal and Installation 9
Inspection 10

FRONT DRIVE SHAFT BOOT 11
Exploded View 11

WHEEL SIDE 12
WHEEL SIDE : Removal and Installation 12

TRANSAXLE SIDE 14
TRANSAXLE SIDE : Removal and Installation 14
Inspection 14

FRONT DRIVE SHAFT 15
Exploded View 15

LEFT SIDE 16
LEFT SIDE : Removal and Installation 16

RIGHT SIDE 17
RIGHT SIDE : Removal and Installation 17

WHEEL SIDE 18
WHEEL SIDE : Disassembly and Assembly 18

TRANSAXLE SIDE 19
TRANSAXLE SIDE : Disassembly and Assembly 20
Inspection 25

SERVICE DATA AND SPECIFICATIONS (SDS) 27

SERVICE DATA AND SPECIFICATIONS (SDS) 27
Wheel Bearing 27
Drive Shaft 27

SYMPTOM DIAGNOSIS

NOISE, VIBRATION AND HARSHNESS (NVH) TROUBLESHOOTING

NVH Troubleshooting Chart

INFOID:0000000009948784

Use chart below to find the cause of the symptom. If necessary, repair or replace these parts.

Reference			—	FAX-25	—	FAX-9	—	FAX-7	NVH in FAX and FSU sections	Refer to FRONT AXLE in this chart	NVH in WT section	NVH in WT section	Refer to DRIVE SHAFT in this chart	NVH in BR section	NVH in ST section
Possible cause and SUSPECTED PARTS			Excessive joint angle	Joint sliding resistance	Imbalance	Improper installation, looseness	Parts interference	Wheel bearing damage	FRONT AXLE AND FRONT SUSPENSION	FRONT AXLE	TIRE	ROAD WHEEL	DRIVE SHAFT	BRAKE	STEERING
Symptom	DRIVE SHAFT	Noise	×	×				×	×	×	×	×		×	×
		Shake	×		×			×	×	×	×	×		×	×
	FRONT AXLE	Noise				×	×	×	×		×	×	×	×	×
		Shake				×	×	×	×		×	×	×	×	×
		Vibration				×	×	×	×		×		×		×
		Shimmy				×	×		×		×	×		×	×
		Judder				×			×		×	×		×	×
		Poor quality ride or handling				×	×		×		×	×			

×: Applicable

PRECAUTION

PRECAUTIONS

Precaution for Supplemental Restraint System (SRS) "AIR BAG" and "SEAT BELT PRE-TENSIONER"

INFOID:0000000009948785

The Supplemental Restraint System such as “AIR BAG” and “SEAT BELT PRE-TENSIONER”, used along with a front seat belt, helps to reduce the risk or severity of injury to the driver and front passenger for certain types of collision. This system includes seat belt switch inputs and dual stage front air bag modules. The SRS system uses the seat belt switches to determine the front air bag deployment, and may only deploy one front air bag, depending on the severity of a collision and whether the front occupants are belted or unbelted. Information necessary to service the system safely is included in the “SRS AIR BAG” and “SEAT BELT” of this Service Manual.

WARNING:

Always observe the following items for preventing accidental activation.

- **To avoid rendering the SRS inoperative, which could increase the risk of personal injury or death in the event of a collision that would result in air bag inflation, all maintenance must be performed by an authorized NISSAN/INFINITI dealer.**
- **Improper maintenance, including incorrect removal and installation of the SRS, can lead to personal injury caused by unintentional activation of the system. For removal of Spiral Cable and Air Bag Module, see “SRS AIR BAG”.**
- **Never use electrical test equipment on any circuit related to the SRS unless instructed to in this Service Manual. SRS wiring harnesses can be identified by yellow and/or orange harnesses or harness connectors.**

PRECAUTIONS WHEN USING POWER TOOLS (AIR OR ELECTRIC) AND HAMMERS

WARNING:

Always observe the following items for preventing accidental activation.

- **When working near the Air Bag Diagnosis Sensor Unit or other Air Bag System sensors with the ignition ON or engine running, never use air or electric power tools or strike near the sensor(s) with a hammer. Heavy vibration could activate the sensor(s) and deploy the air bag(s), possibly causing serious injury.**
- **When using air or electric power tools or hammers, always switch the ignition OFF, disconnect the battery, and wait at least 3 minutes before performing any service.**

Precautions for Drive Shaft

INFOID:0000000009948786

Observe the following precautions when disassembling and assembling drive shaft.

- Never disassemble joint sub-assembly because it is non-overhaul parts.
- Perform work in a location which is as dust-free as possible.
- Clean the parts, before disassembling and assembling.
- Prevent the entry of foreign objects during disassembly of the service location.
- Reassemble disassembled parts carefully in the correct order. If work is interrupted, a clean cover must be placed over parts.
- Use paper waste. Fabric shop cloths must not be used because of the danger of lint adhering to parts.
- Clean disassembled parts (except for rubber parts) with kerosene which shall be removed by blowing with air or wiping with paper waste.

Precautions for Removing of Battery Terminal

INFOID:0000000010078183

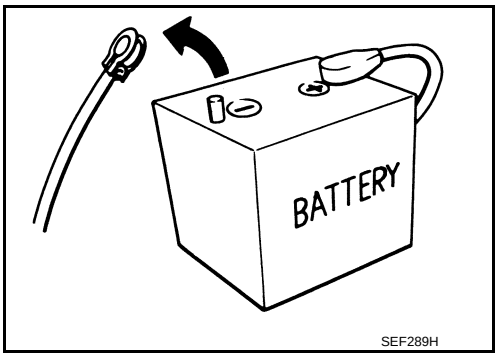

- When removing the 12V battery terminal, turn OFF the ignition switch and wait at least 30 seconds.
  NOTE:
  ECU may be active for several tens of seconds after the ignition switch is turned OFF. If the battery terminal is removed before ECU stops, then a DTC detection error or ECU data corruption may occur.
- For vehicles with the 2-batteries, be sure to connect the main battery and the sub battery before turning ON the ignition switch.
  NOTE:
  If the ignition switch is turned ON with any one of the terminals of main battery and sub battery disconnected, then DTC may be detected.
- After installing the 12V battery, always check "Self Diagnosis Result" of all ECUs and erase DTC.
  NOTE:
  The removal of 12V battery may cause a DTC detection error.

PREPARATION

PREPARATION

Special Service Tool

INFOID:0000000009948787

The actual shapes of Kent-More tools may differ from those of special service tools illustrated here.

Tool number (Kent-More No.) Tool name	Description
KV40107300 (—) Boot band crimping tool 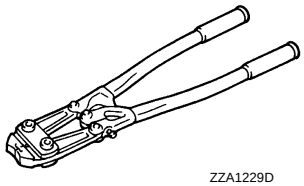 ZZA1229D	Installing boot band
KV40107500 (—) Drive shaft attachment ZZA1230D	Removing drive shaft
KV38107900 (—) Protector a: 32 mm (1.26 in) dia. 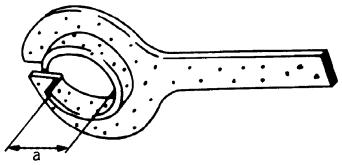 PDIA1183J	Installing drive shaft

Commercial Service Tool

INFOID:0000000009948788

Tool name	Description
Power tool 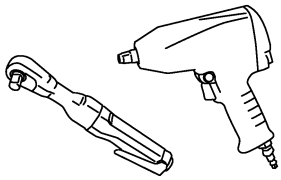 PBIC0190E	Loosening bolts and nuts

Tool name	Description
Drive shaft puller 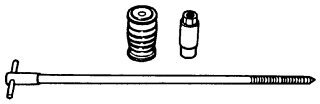 JPDIG0152ZZ	Removing drive shaft joint sub assembly
Sliding hummer 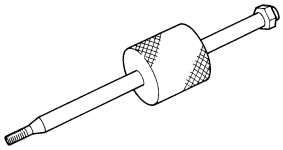 ZZA0023D	Removing drive shaft

PERIODIC MAINTENANCE

FRONT WHEEL HUB AND KNUCKLE

Inspection

INFOID:0000000009948789

COMPONENT PART

Check that the mounting conditions (looseness, backlash) of each component and component conditions (wear, damage) are normal.

WHEEL HUB AND BEARING ASSEMBLY

Check the following items, and replace the part if necessary.

- Move wheel hub and bearing assembly in the axial direction by hand. Check there is no looseness of wheel bearing.

Axial end play **: Refer to FAX-27, "Wheel Bearing".**

- Rotate wheel hub and bearing assembly and check there is no unusual noise or other irregular conditions. If there is any of irregular conditions, replace wheel hub and bearing assembly.

FRONT DRIVE SHAFT

Inspection

INFOID:0000000009948790

Check the following items, and replace the part if necessary.

- Check drive shaft mounting point and joint for looseness and other damage.
  CAUTION:
  Replace entire drive shaft assembly when noise or vibration occurs from drive shaft.
- Check boot for cracks and other damage.

REMOVAL AND INSTALLATION

FRONT WHEEL HUB AND KNUCKLE

Exploded View

INFOID:0000000009948791

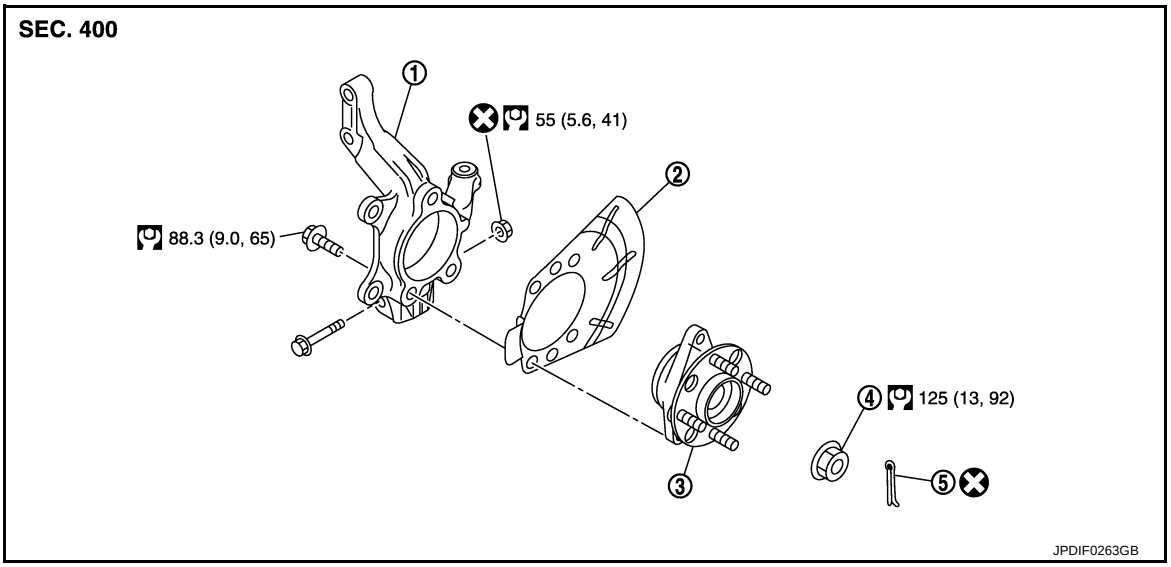

1. Steering knuckle
2. Splash guard
3. Wheel hub and bearing assembly
4. Wheel hub lock nut
5. Cotter pin

Refer to GI-4, "Components" for symbols in the figure.

Removal and Installation

INFOID:0000000009948792

REMOVAL

1. Remove tires with power tool. Refer to WT-46, "Exploded View".
2. Remove wheel sensor and sensor harness. Refer to BRC-110, "FRONT WHEEL SENSOR : Exploded View".
3. Remove lock plate from strut assembly. Refer to BR-20, "FRONT : Exploded View".
4. Remove caliper assembly. Hang caliper assembly not to interfere with work. Refer to BR-34, "BRAKE CALIPER ASSEMBLY : Exploded View".
   CAUTION:
   Never depress brake pedal while brake caliper is removed.
5. Remove disc rotor. Refer to BR-35, "BRAKE CALIPER ASSEMBLY : Removal and Installation".
6. Remove cotter pin, and then loosen wheel hub lock nut with power tool.
7. Patch wheel hub lock nut with a piece of wood. Hammer the wood to disengage wheel hub and bearing assembly from drive shaft.
   CAUTION:
   - **Never place drive shaft joint at an extreme angle. Also be careful not to overextend slide joint.**
   - **Never allow drive shaft to hang down without support for joint sub-assembly, shaft and the other parts.**

   NOTE:
   Use suitable puller, if wheel hub and bearing assembly and drive shaft cannot be separated even after performing the above procedure.
8. Remove wheel hub lock nut.
9. Remove wheel hub and bearing assembly, and then remove splash guard.
10. Suspend the drive shaft with suitable wire.
11. Remove steering outer socket from steering knuckle. Refer to ST-14, "Exploded View".
12. Remove steering knuckle from transverse link.

13. Remove steering knuckle from strut assembly. Refer to FSU-9, "Exploded View".

INSTALLATION

Note the following, and install in the reverse order of the removal.

- Clean the matching surface of wheel hub lock nut and wheel hub and bearing assembly.
  CAUTION:
  Never apply lubricating oil to these matching surface.
- Tighten the wheel hub lock nut to the specified torque. Refer to FAX-9, "Exploded View".
  CAUTION:
  Never use a power tool to tighten the wheel hub lock nut.
- Perform the final tightening of each of parts under unladen conditions, which were removed when removing wheel hub and bearing assembly and axle housing.
- Never reuse cotter pin.

Inspection

INFOID:0000000009948793

INSPECTION AFTER REMOVAL

Check the following items, and replace the part it necessary.

- Check components for deformation, cracks, and other damage. Replace if necessary.
- Check boots of transverse link and steering outer socket ball joint for breakage, axial play, and torque. Refer to FSU-13, "Inspection" and ST-18, "Inspection".

INSPECTION AFTER INSTALLATION

1. Check wheel sensor harness for proper connection. Refer to BRC-110, "FRONT WHEEL SENSOR : Exploded View".
2. Check the wheel alignment. Refer to FSU-7, "Inspection".
3. Adjust neutral position of steering angle sensor. Refer to BRC-9, "Special Repair Requirement".

FRONT DRIVE SHAFT BOOT

Exploded View

INFOID:0000000009948794

LEFT SIDE

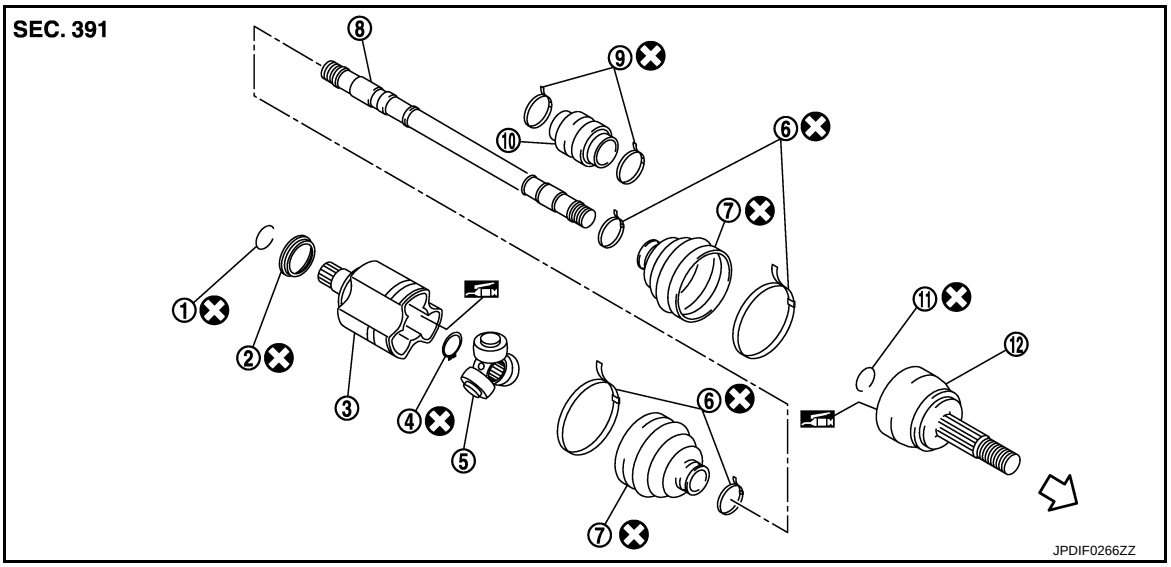

1.	Circular clip	2.	Dust shield	3.	Housing
4.	Snap ring	5.	Spider assembly	6.	Boot band
7.	Boot	8.	Shaft	9.	Damper band
10.	Dynamic damper	11.	Circular clip	12.	Joint sub-assembly

⇦ : Wheel side

: Fill NISSAN Genuine grease or equivalent.

Refer to GI-4, "Components" for symbols not described on the above.

RIGHT SIDE

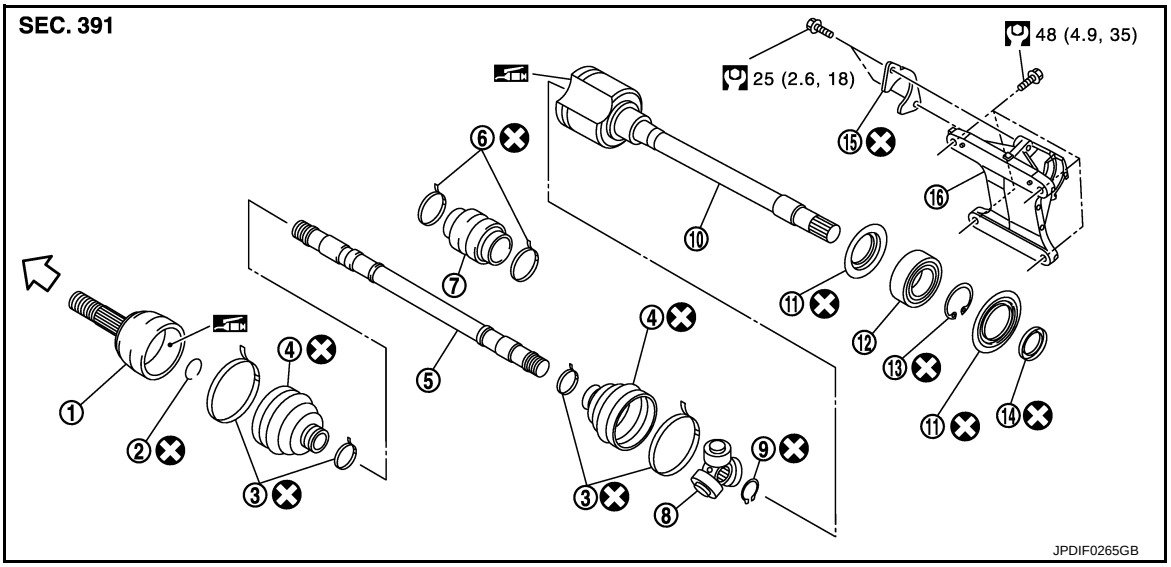

1.	Joint sub-assembly	2.	Circular clip	3.	Boot band
4.	Boot	5.	Shaft	6.	Damper band
7.	Dynamic damper	8.	Spider assembly	9.	Snap ring
10.	Housing	11.	Dust shield	12.	Support bearing

13. Snap ring
14. Dust shield
15. Plate
16. Support bearing bracket

⇦ : Wheel side

: Fill NISSAN Genuine grease or equivalent.

Refer to GI-4, "Components" for symbols not described on the above.

WHEEL SIDE

WHEEL SIDE : Removal and Installation

INFOID:0000000009948795

REMOVAL

1. Remove tires with power tool. Refer to WT-46, "Exploded View".
2. Remove wheel sensor and sensor harness. Refer to BRC-110, "FRONT WHEEL SENSOR : Exploded View".
3. Remove lock plate from strut assembly. Refer to BR-20, "FRONT : Exploded View".
4. Remove caliper assembly. Hang caliper assembly not to interfere with work. Refer to BR-34, "BRAKE CALIPER ASSEMBLY : Exploded View".
   CAUTION:
   Never depress brake pedal while brake caliper is removed.
5. Remove disc rotor. Refer to BR-35, "BRAKE CALIPER ASSEMBLY : Removal and Installation".
6. Remove cotter pin, and then loosen wheel hub lock nut. Refer to FAX-9, "Exploded View".
7. Patch wheel hub lock nut with a piece of wood. Hammer the wood to disengage wheel hub and bearing assembly from drive shaft.
   CAUTION:
   - **Never place drive shaft joint at an extreme angle. Also be careful not to overextend slide joint.**
   - **Never allow drive shaft to hang down without support for joint sub-assembly, shaft and the other parts.**

   NOTE:
   Use suitable puller, if wheel hub and bearing assembly and drive shaft cannot be separated even after performing the above procedure.
8. Remove wheel hub lock nut.
9. Remove strut assembly from steering knuckle. Refer to FSU-9, "Exploded View".
10. Remove drive shaft from wheel hub and bearing assembly.
11. Remove boot bands, and then remove boot from joint subassembly.
12. Screw drive shaft puller (commercial service tool) (A) into joint sub-assembly screw part to a length of 30 mm (1.18 in) or more. Support drive shaft with one hand and pull out joint sub-assembly from shaft.
    CAUTION:
    - **Align a sliding hammer and drive shaft and remove them by pulling firmly and uniformly.**
    - **If joint sub-assembly cannot be pulled out, try after removing drive shaft from vehicle. Refer to FAX-18, "WHEEL SIDE : Disassembly and Assembly".**

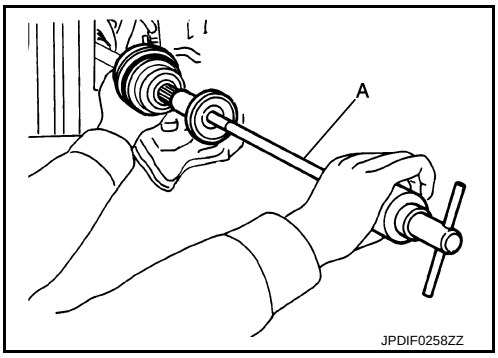

13. Remove circular clip from shaft.
14. Remove boot from shaft.

INSTALLATION

1. Clean the old grease on joint sub-assembly with paper waste.
2. Fill serration slot joint sub-assembly with NISSAN genuine grease or equivalent until the serration slot and ball groove become full to the brim.
   CAUTION:
   After applying grease, use a paper waste to wipe off old grease that has oozed out.

3. Install boot and boot bands to shaft.
   CAUTION:
   - **Wrap serration on shaft with tape to protect the boot from damage.**
   - **Never reuse boot and boot band.**
4. Remove the tape wrapped around the serration on shaft.
5. Position the circular clip on groove at the shaft edge.
   CAUTION:
   Never reuse circular clip.
   NOTE:
   Drive joint inserter is recommended when installing circular clip.
6. Align both center axles of the shaft edge and joint sub-assembly. Then assemble shaft with joint sub-assembly holding circular clip.
7. Install joint sub-assembly (1) to shaft using plastic hammer.
   CAUTION:
   Confirm that joint sub-assembly is correctly engaged while rotating drive shaft.
8. Apply the specified amount of grease into the boot inside from large diameter side of boot.

   Grease amount : Refer to FAX-27, "Drive Shaft".

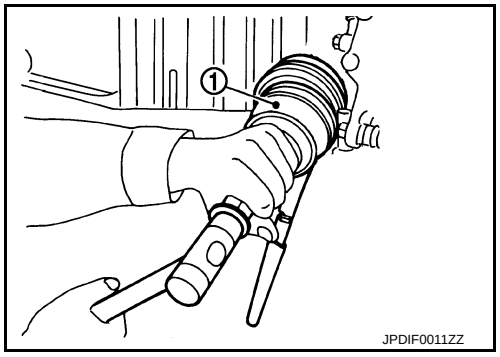

9. Install the boot securely into grooves (indicated by “*” marks) shown in the figure.
   CAUTION:
   If grease adheres to the boot mounting surface (indicated by “*” mark) on the shaft or joint sub-assembly, boot may be removed. Remove all grease from the boot mounting surface.
10. To prevent the deformation of the boot, adjust the boot installation length (L) to the specified value shown below by inserting the suitable tool into inside of the boot from the large diameter side of the boot and discharging the inside air.

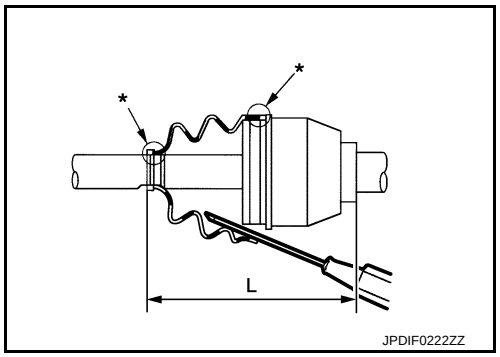

    L : Refer to FAX-27, "Drive Shaft".

    CAUTION:
    - **If the boot installation length exceeds the standard, it may cause breakage of the boot.**
    - **Be careful not to touch the inside of the boot with a tip of tool.**
11. Secure the large and small ends of the boot with boot bands using the boot band crimping tool [SST: KV40107300 (—)] (A).
    CAUTION:
    Never reuse boot band.

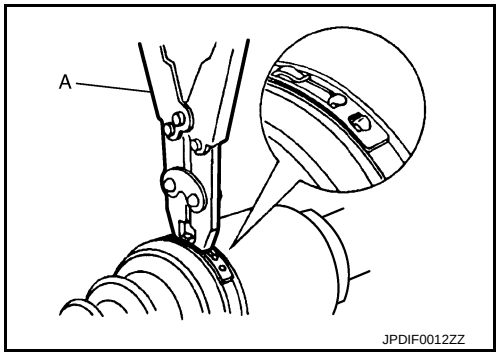

NOTE:

Secure boot band so that dimension (A) meets the specification as shown in the figure.

A : 7.0 mm (0.276 in) or less

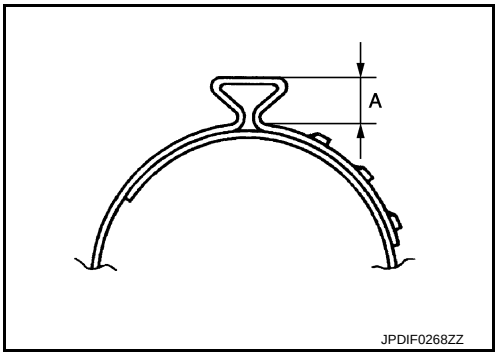

12. Secure joint sub-assembly and shaft, and then check that they are in the correct position when rotating boot. Reinstall them using boot bands when boot installation positions become incorrect.
    CAUTION:
    Never reuse boot band.
13. Clean the matching surface of wheel hub lock nut and wheel hub and bearing assembly.
    CAUTION:
    Never apply lubricating oil to these matching surface.
14. Insert drive shaft to wheel hub and bearing assembly, and then temporarily tighten wheel hub lock nut.
15. Install strut assembly to steering knuckle. Refer to FSU-9, "Exploded View".
16. Install disc rotor. Refer to BR-35, "BRAKE CALIPER ASSEMBLY : Removal and Installation".
17. Install caliper assembly to steering knuckle. Refer to BR-34, "BRAKE CALIPER ASSEMBLY : Exploded View".
18. Install lock plate to strut assembly. Refer to BR-20, "FRONT : Exploded View".
19. Install wheel sensor and sensor harness to steering knuckle. Refer to BRC-110, "FRONT WHEEL SENSOR : Exploded View".
20. Tighten the wheel hub lock nut to the specified torque. Refer to FAX-9, "Exploded View".
    CAUTION:
    Never use a power tool to tighten the wheel hub lock nut.

NOTE:
Perform the final tightening of each of parts under unladen conditions, which were removed when removing wheel hub and bearing assembly and axle housing.

21. Install cotter pin. Refer to FAX-9, "Exploded View".
    CAUTION:
    - **Never reuse cotter pin.**
    - **Bend cotter pin at the root sufficiently to prevent any looseness.**
22. Install tires. Refer to WT-46, "Exploded View".

TRANSAXLE SIDE

TRANSAXLE SIDE : Removal and Installation

INFOID:0000000009948796

NOTE:
Remove boot after removing drive shaft. Refer to FAX-16, "LEFT SIDE : Removal and Installation" (left side), FAX-17, "RIGHT SIDE : Removal and Installation" (right side).

Inspection

INFOID:0000000009948797

INSPECTION AFTER INSTALLATION

Check the following items, and replace the part it necessary.

- Move joint up/down, left/right, and in the axial directions. Check for motion that is not smooth and for significant looseness.
- Check boot for cracks, damage, and leakage of grease.
- Check wheel sensor harness for proper connection. Refer to BRC-110, "FRONT WHEEL SENSOR : Exploded View".
- Adjust neutral position of steering angle sensor. Refer to BRC-9, "Special Repair Requirement".

FRONT DRIVE SHAFT

Exploded View

INFOID:0000000009948798

LEFT SIDE

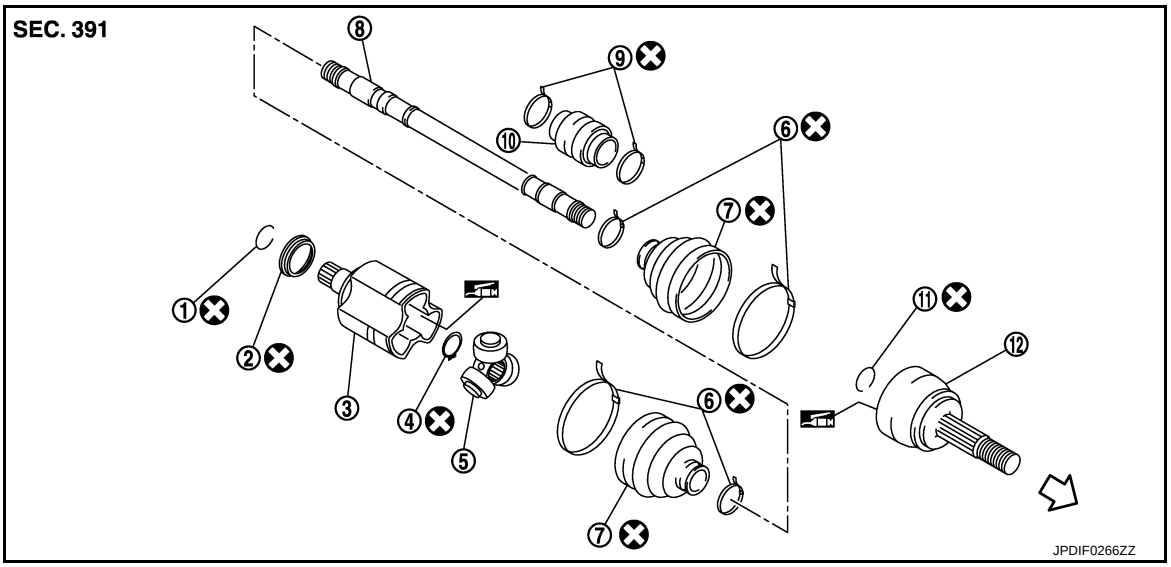

1.	Circular clip	2.	Dust shield	3.	Housing
4.	Snap ring	5.	Spider assembly	6.	Boot band
7.	Boot	8.	Shaft	9.	Damper band
10.	Dynamic damper	11.	Circular clip	12.	Joint sub-assembly

⇦ : Wheel side

: Fill NISSAN Genuine grease or equivalent.

Refer to GI-4, "Components" for symbols not described on the above.

RIGHT SIDE

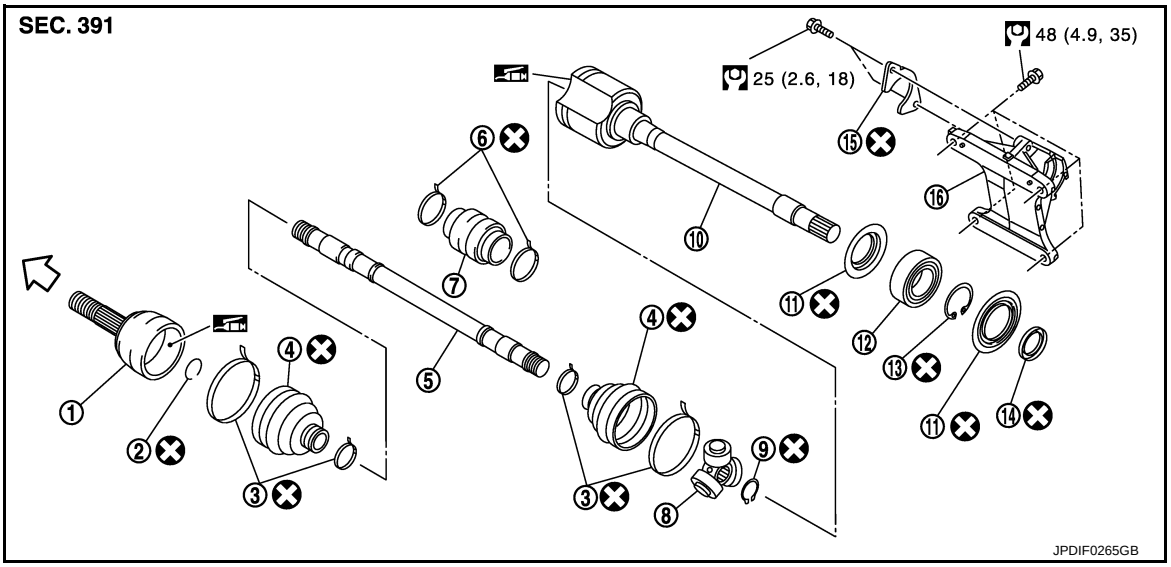

1.	Joint sub-assembly	2.	Circular clip	3.	Boot band
4.	Boot	5.	Shaft	6.	Damper band
7.	Dynamic damper	8.	Spider assembly	9.	Snap ring
10.	Housing	11.	Dust shield	12.	Support bearing

13. Snap ring
14. Dust shield
15. Plate
16. Support bearing bracket

⇦ : Wheel side

: Fill NISSAN Genuine grease or equivalent.

Refer to GI-4, "Components" for symbols not described on the above.

LEFT SIDE

LEFT SIDE : Removal and Installation

INFOID:0000000009948799

REMOVAL

1. Remove tires with power tool. Refer to WT-46, "Exploded View".
2. Remove cotter pin, and then loosen wheel hub lock nut. Refer to FAX-9, "Exploded View".
3. Patch wheel hub lock nut with a piece of wood. Hammer the wood to disengage wheel hub and bearing assembly from drive shaft.
   CAUTION:
   - **Never place drive shaft joint at an extreme angle. Also be careful not to overextend slide joint.**
   - **Never allow drive shaft to hang down without support for joint sub-assembly, shaft and the other parts.**

   NOTE:
   Use suitable puller, if wheel hub and bearing assembly and drive shaft cannot be separated even after performing the above procedure.
4. Remove wheel hub lock nut.
5. Remove transverse link from steering knuckle. Refer to FSU-13, "Exploded View".
6. Remove shaft assembly from wheel hub and bearing assembly.
   CAUTION:
   Be careful not to damage front wheel sensor and harness.
7. Use the drive shaft attachment [SST: KV40107500 (—)] (A) and a sliding hammer (commercial service tool) (B) while inserting tip of the drive shaft attachment between shaft and transaxle assembly, and then remove drive shaft from transaxle assembly.
   CAUTION:
   - **Never place drive shaft joint at an extreme angle when removing drive shaft. Also be careful not to overextend slide joint.**
   - **Confirm that the circular clip is attached to the drive shaft.**

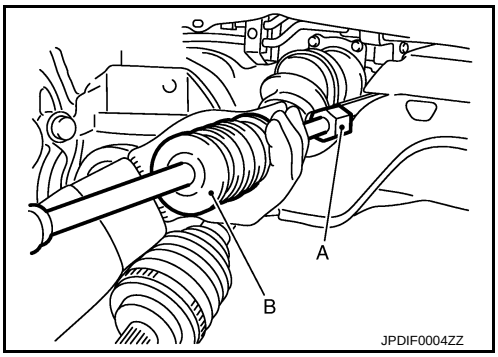

INSTALLATION

Note the following, and install in the reverse order of removal.

Transaxle Side

- Always replace differential side oil seal with new one when installing drive shaft. Refer to TM-18, "Removal and Installation" (MT), TM-229, "Removal and Installation" (CVT).
- Place the protector [SST: KV38107900 (—)] (A) onto transaxle assembly to prevent damage to the oil seal while inserting drive shaft. Slide drive shaft sliding joint and tap with a hammer to install securely.
  CAUTION:
  Check that circular clip is completely engaged.

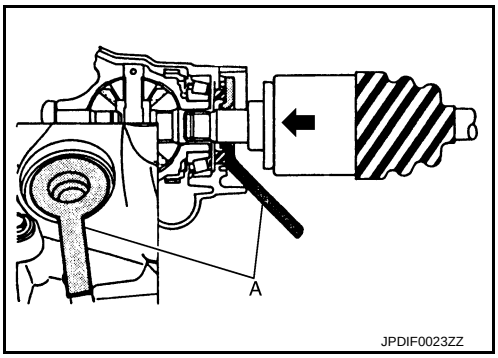

Wheel Hub Side

- Clean the matching surface of wheel hub lock nut and wheel hub and bearing assembly.
  CAUTION:
  Never apply lubricating oil to these matching surface.
- Tighten the wheel hub lock nut to the specified torque. Refer to FAX-9, "Exploded View".
  CAUTION:
  Never use a power tool to tighten the wheel hub lock nut.
- Perform the final tightening of each of parts under unladen conditions, which were removed when removing wheel hub and bearing assembly and axle housing.
- Never reuse cotter pin.

RIGHT SIDE

RIGHT SIDE : Removal and Installation

INFOID:0000000009948800

REMOVAL

1. Remove tires with power tool. Refer to WT-46, "Exploded View".
2. Remove wheel sensor and sensor harness if necessary. Refer to BRC-110, "FRONT WHEEL SENSOR : Exploded View".
3. Remove cotter pin, and then loosen wheel hub lock nut. Refer to FAX-9, "Exploded View".
4. Patch wheel hub lock nut with a piece of wood. Hammer the wood to disengage wheel hub and bearing assembly from drive shaft.
   CAUTION:
   - **Never place drive shaft joint at an extreme angle. Also be careful not to overextend slide joint.**
   - **Never allow drive shaft to hang down without support for joint sub-assembly, shaft and the other parts.**

   NOTE:
   Use suitable puller, if wheel hub and bearing assembly and drive shaft cannot be separated even after performing the above procedure.
5. Remove wheel hub lock nut.
6. Remove transverse link from steering knuckle. Refer to FSU-13, "Exploded View".
7. Remove drive shaft from wheel hub and bearing assembly.
8. Remove bearing housing plate bolts.
9. Remove drive shaft from transaxle assembly.
   CAUTION:
   Never place drive shaft joint at an extreme angle when removing drive shaft. Also be careful not to overextend slide joint.
10. Remove support bearing bracket.

INSTALLATION

Note the following, and install in the reverse order of removal.

Transaxle Side

- Always replace differential side oil seal with new one when installing drive shaft. Refer to TM-18, "Removal and Installation" (MT), TM-229, "Removal and Installation" (CVT).
- Install support bearing bracket (1) in following procedure,
- Temporarily tighten mounting bolts (A), (B), then tighten them to specified torque.
- Set plate (2) so that notch (C) becomes upper side. Temporarily tighten mounting bolts (a), (b), then tighten them to specified torque.
  CAUTION:
  Never reuse plate.

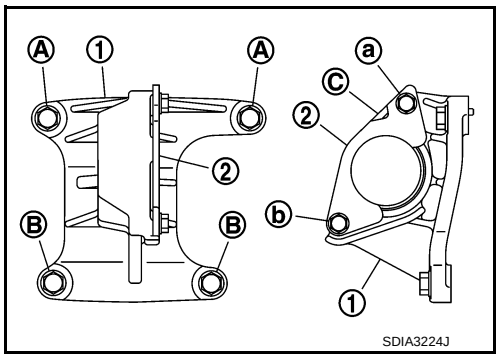

- Place the protector [SST: KV38107900 (—)] (A) onto transaxle assembly to prevent damage to the oil seal while inserting drive shaft. Slide drive shaft sliding joint and tap with a hammer to install securely.

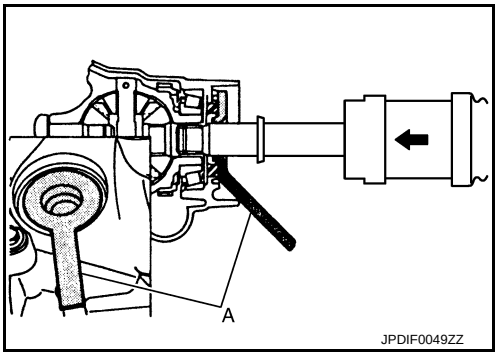

Wheel Hub Side

- Clean the matching surface of wheel hub lock nut and wheel hub and bearing assembly.
  CAUTION:
  Never apply lubricating oil to these matching surface.
- Tighten the wheel hub lock nut to the specified torque. Refer to FAX-9, "Exploded View".
  CAUTION:
  Never use a power tool to tighten the wheel hub lock nut.
- Perform the final tightening of each of parts under unladen conditions, which were removed when removing wheel hub and bearing assembly and axle housing.
- Never reuse cotter pin.

WHEEL SIDE

WHEEL SIDE : Disassembly and Assembly

INFOID:0000000009948801

DISASSEMBLY

1. Fix shaft with a vise.
   CAUTION:
   Protect shaft when fixing with a vise using aluminum or copper plates.
2. Remove boot bands, and then remove boot from joint sub-assembly.
3. Screw drive shaft puller (commercial service tool) (A) into joint sub-assembly screw part to a length of 30 mm (1.18 in) or more. Support drive shaft with one hand and pull out joint sub-assembly from shaft.
   CAUTION:
   - **Align a sliding hammer and drive shaft and remove them by pulling firmly and uniformly.**
   - **If joint sub-assembly cannot be pulled out, try after removing drive shaft from vehicle.**
4. Remove circular clip (1) from shaft.
5. Remove boot from shaft.

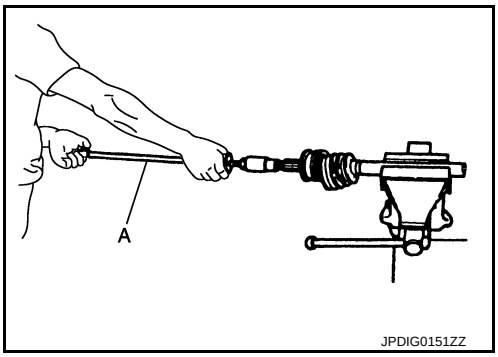

ASSEMBLY

1. Clean the old grease on joint sub-assembly with paper waste.
2. Fill serration slot joint sub-assembly with NISSAN genuine grease or equivalent until the serration slot and ball groove become full to the brim.
   CAUTION:
   After applying grease, use a paper waste to wipe off old grease that has oozed out.
3. Install boot and boot bands to shaft.
   CAUTION:
   - **Wrap serration on shaft with tape to protect the boot from damage.**
   - **Never reuse boot and boot band.**
4. Remove the tape wrapped around the serration on shaft.
5. Position the circular clip on groove at the shaft edge.
   CAUTION:
   Never reuse circular clip.
   NOTE:

Drive joint inserter is recommended when installing circular clip.

6. Align both center axles of the shaft edge and joint sub-assembly. Then assemble shaft with joint sub-assembly holding circular clip.
7. Install joint sub-assembly to shaft using plastic hammer.
   CAUTION:
   - **Check circular clip is properly positioned on groove of the joint sub-assembly.**
   - **Confirm that joint sub-assembly is correctly engaged while rotating drive shaft.**
8. Apply the specified amount of grease into the boot inside from large diameter side of boot.

   Grease amount : Refer to FAX-27, "Drive Shaft".

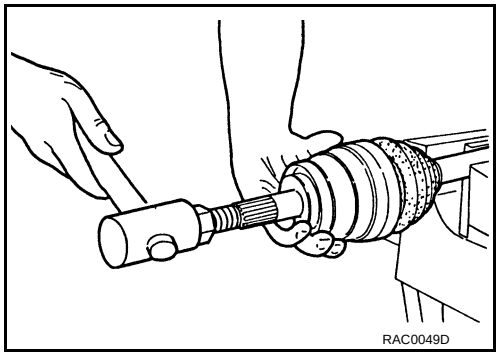

9. Install the boot securely into grooves (indicated by “*” marks) shown in the figure.
   CAUTION:
   If grease adheres to the boot mounting surface (indicated by “*” mark) on the shaft or joint sub-assembly, boot may be removed. Remove all grease from the boot mounting surface.
10. To prevent the deformation of the boot, adjust the boot installation length (L) to the specified value shown below by inserting the suitable tool into inside of the boot from the large diameter side of the boot and discharging the inside air.

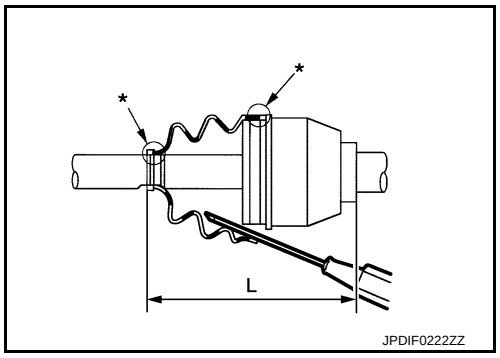

   L : Refer to FAX-27, "Drive Shaft".

   CAUTION:
   - **If the boot installation length exceeds the standard, it may cause breakage of the boot.**
   - **Be careful not to touch the inside of the boot with a tip of tool.**
11. Secure the large and small ends of the boot with boot bands using the boot band crimping tool [SST: KV40107300 (—)] (A).
    CAUTION:
    Never reuse boot band.

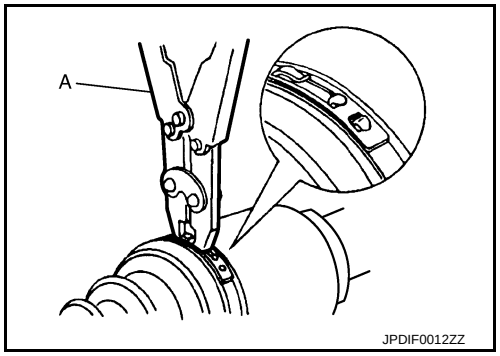

    NOTE:
    Secure boot band so that dimension (A) meets the specification as shown in the figure.

    A : 7.0 mm (0.276 in) or less

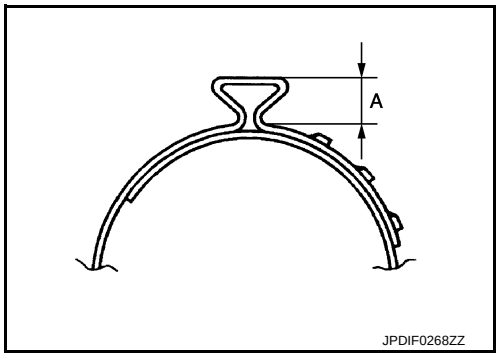

12. Secure joint sub-assembly and shaft, and then check that they are in the correct position when rotating boot. Reinstall them using boot bands when boot installation positions become incorrect.
    CAUTION:
    Never reuse boot band.

TRANSAXLE SIDE

TRANSAXLE SIDE : Disassembly and Assembly

INFOID:0000000009948802

DISASSEMBLY

Left Side

1. Fix shaft with a vise.
   CAUTION:
   Protect shaft using aluminum or copper plates when fixing with a vise.
2. Remove boot bands, and then remove boot from housing.
3. Put matching marks on housing and shaft, and then pull out housing from shaft.
   CAUTION:
   Use paint or an equivalent for matching marks. Never scratch the surfaces.
4. Put matching marks (A) on the spider assembly and shaft.
   CAUTION:
   Use paint or an equivalent for matching marks. Never scratch the surfaces.

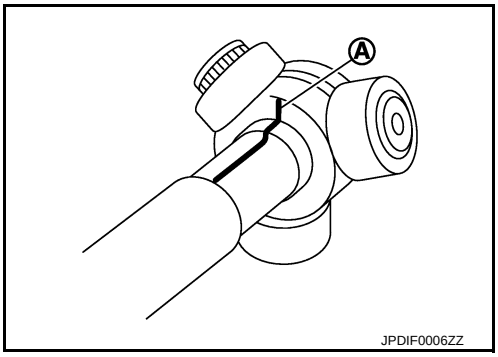

5. Remove snap ring (1), and then remove spider assembly from shaft.
6. Remove boot from shaft.
7. Remove dust shield from housing.
8. Remove circular clip from housing.
9. Clean old grease on housing with paper towels.
10. Remove damper bands, then remove dynamic damper from shaft.

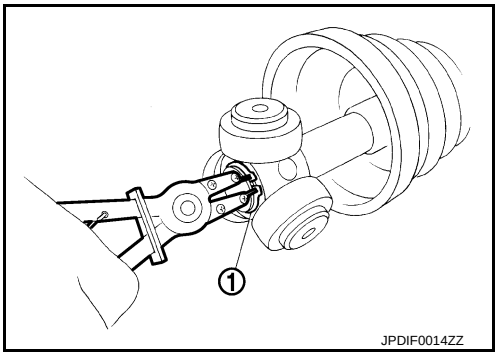

Right Side

1. Fix shaft with a vise.
   CAUTION:
   Protect shaft using aluminum or copper plates when fixing with a vise.
2. Remove boot bands, and then remove boot from housing.
3. Put matching marks on housing and shaft, and then pull out housing from shaft.
   CAUTION:
   Use paint or an equivalent for matching marks. Never scratch the surfaces.
4. Put matching marks (A) on the spider assembly and shaft.
   CAUTION:
   Use paint or an equivalent for matching marks. Never scratch the surfaces.

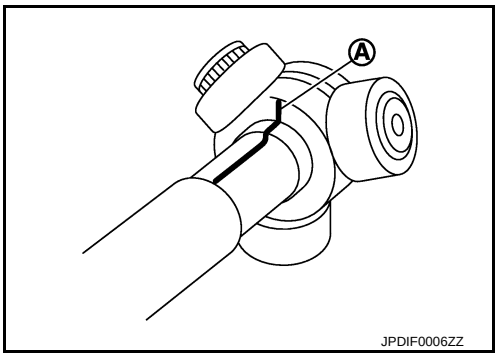

5. Remove snap ring (1), and then remove spider assembly from shaft.
6. Remove boot from shaft.
7. Remove circular clip from housing.
8. Remove damper bands, then remove dynamic damper from shaft.

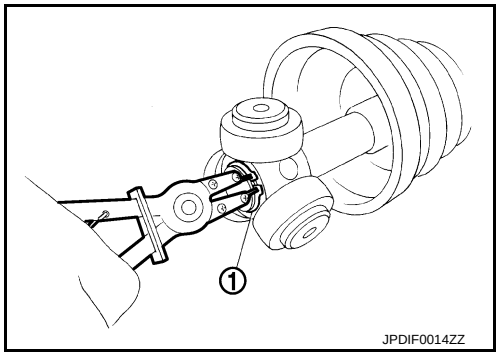

9. Remove support bearing, follow the procedure described below.

a. Remove dust shield from housing.

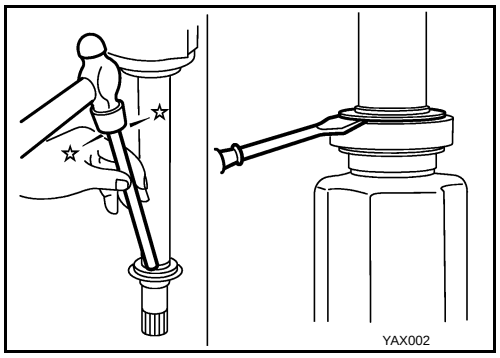

b. Remove snap ring (1).

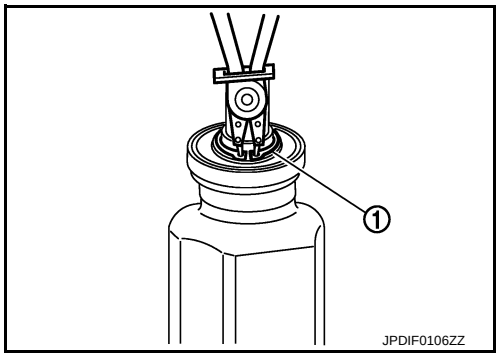

c. Press out support bearing from housing.

d. Remove dust shield from housing.

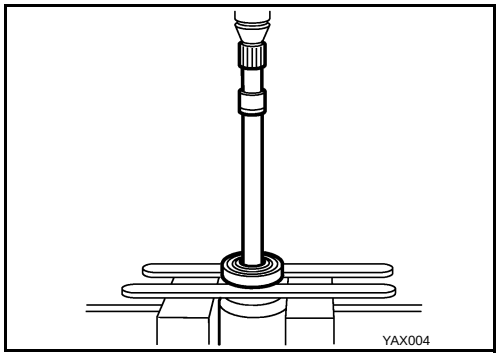

10. Clean old grease on housing with paper waste.

ASSEMBLY

Left Side

1. Install dynamic damper, follow the procedure described below.

a. Install dynamic damper to shaft.

b. Secure dynamic damper with bands in the following specified position (A) when installing.
CAUTION:
Never reuse bands.

A : Refer to FAX-27, "Drive Shaft".

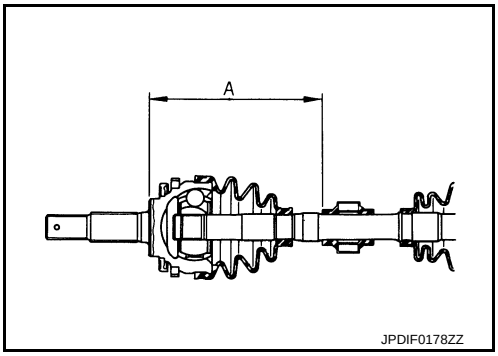

2. Wrap serration on shaft with tape (A) to protect boot from damage. Install new boot and boot bands to shaft.
CAUTION:
Never reuse boot and boot bands.
3. Remove the tape wrapped around the serration on shaft.

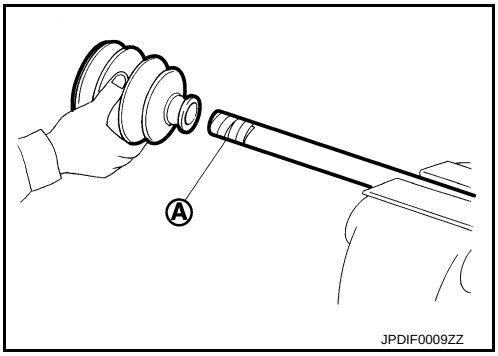

4. To install the spider assembly (1), align it with the matching marks (A) on the shaft (2) during the removal, and direct the serration mounting surface (B) to the shaft.

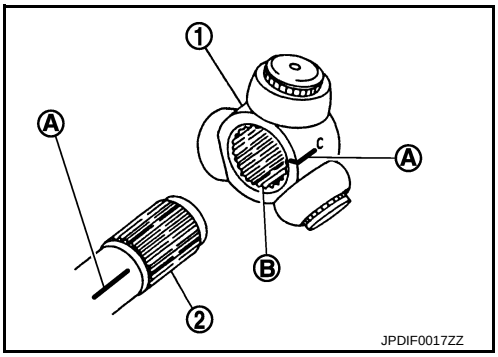

5. Secure spider assembly onto shaft with snap ring (1).
CAUTION:
Never reuse snap ring.
6. Apply the appropriate amount of grease to spider assembly and sliding surface.
7. Assemble the housing onto spider assembly, and apply the balance of the specified amount grease.

Grease amount : Refer to FAX-27, "Drive Shaft".

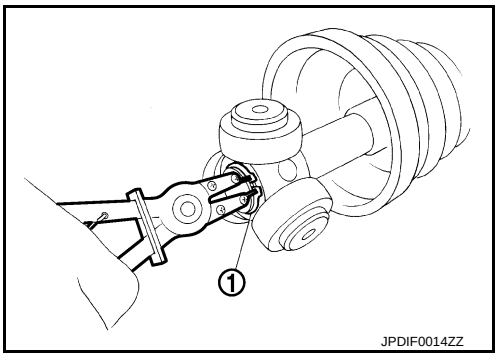

8. Align matching marks put during the removal of housing.
9. Install boot securely into grooves (indicated by “*” marks) shown in the figure.
CAUTION:
If grease adheres to the boot mounting surface (with “*” mark) on shaft or housing, boot may be removed. Remove all grease from the surface.
10. To prevent the deformation of the boot, adjust the boot installation length to the value shown below (L) by inserting the suitable tool into the inside of boot from the large diameter side of boot and discharging inside air.

L : Refer to FAX-27, "Drive Shaft".

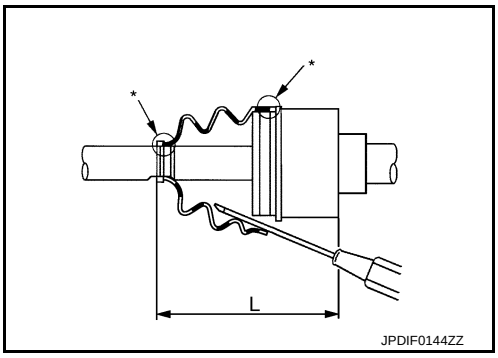

CAUTION:
- **If the boot installation length exceeds the standard, it may cause breakage of the boot.**
- **Be careful not to touch the inside of the boot with the tip of tool.**

11. Install boot bands securely as shown in the figure.
CAUTION:
Never reuse boot bands.

a. Put boot band in the groove on drive shaft boot. Then fit pawls (⬅) into holes to temporary installation.
NOTE:
For the large diameter side, fit projection (A) and guide slit (B) at first.

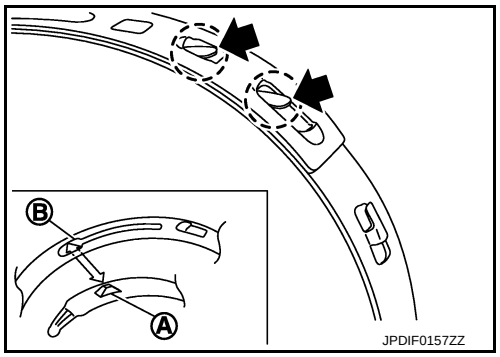

b. Pinch projection on the band with suitable pliers to tighten band.
c. Insert tip of band below end of the pawl.

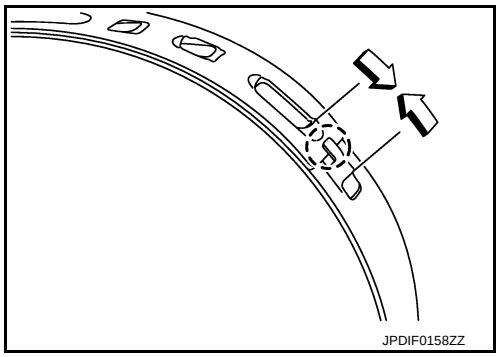

12. Secure housing and shaft, and then check that they are in the correct position when rotating boot. Install them with new boot band when the mounting positions become incorrect.
13. Install dust shield.
CAUTION:
Never reuse dust shield.
14. Install circular clip to housing.
CAUTION:
Never reuse circular clip.

Right Side

1. Install support bearing, follow the procedure described below.

a. Install dust shield to housing.
CAUTION:
Never reuse dust shield.

b. Press support bearing (1) onto housing to using the suitable tool (A).
CAUTION:
Never reuse support bearing.

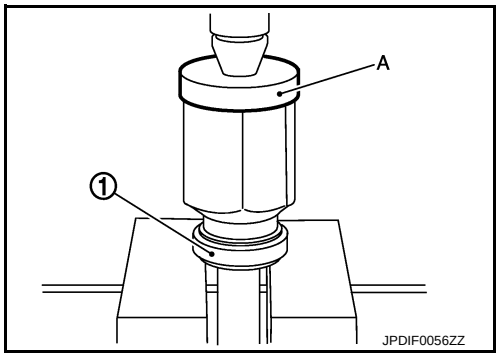

c. Install snap ring (1).
CAUTION:
Never reuse snap ring.

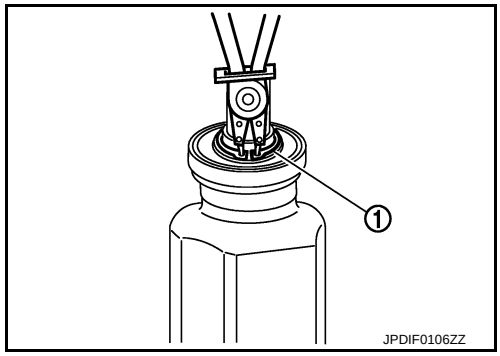

d. Install dust shields.
CAUTION:
Never reuse dust shields.

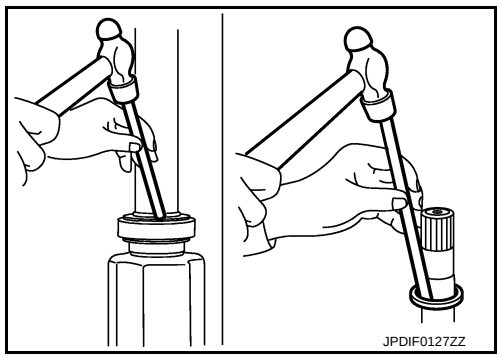

2. Install dynamic damper, follow the procedure described below.
a. Install dynamic damper to shaft.
b. Secure dynamic damper with bands in the following specified position (A) when installing.
CAUTION:
Never reuse bands.

A : Refer to FAX-27, "Drive Shaft".

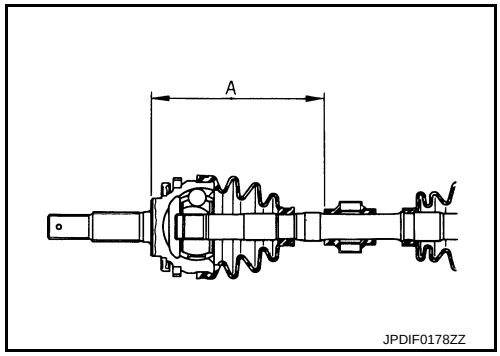

3. Wrap serration on shaft with tape (A) to protect boot from damage. Install new boot and boot bands to shaft.
CAUTION:
Never reuse boot and boot band.
4. Remove the tape wrapped around the serration on shaft.

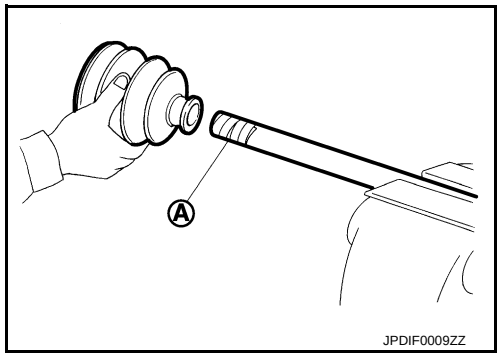

5. To install the spider assembly (1), align it with the matching marks (A) on the shaft (2) during the removal, and direct the serration mounting surface (B) to the shaft.

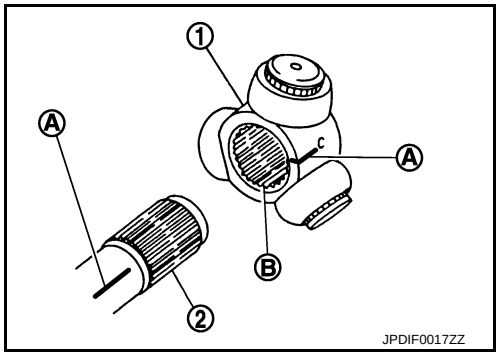

6. Secure spider assembly onto shaft with snap ring (1).
   CAUTION:
   Never reuse snap ring.
7. Apply the appropriate amount of grease to spider assembly and sliding surface.
8. Assemble the housing onto spider assembly, and apply the balance of the specified amount grease.

   Grease amount : Refer to FAX-27, "Drive Shaft".

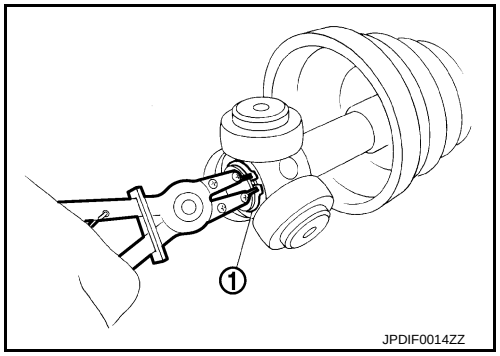

9. Align matching marks put during the removal of housing.
10. Install the boot, following the procedures below.
    - Install boot securely into grooves (indicated by "*" marks) shown in the figure (Except for CVT models).
      CAUTION:
      If grease adheres to the boot mounting surface (with "*" mark) on shaft or housing, boot may be removed. Remove all grease from the surface.

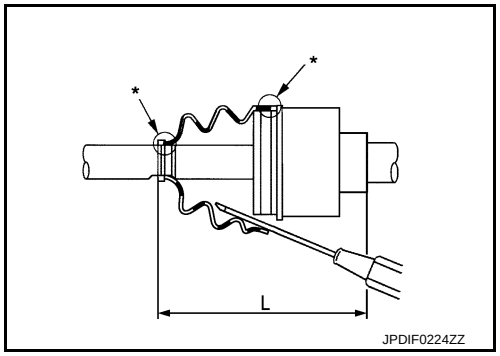

    - Install boot securely into grooves (indicated by "*" marks) shown in the figure (For CVT models).
      CAUTION:
      If grease adheres to the boot mounting surface (with "*" mark) on shaft or housing, boot may be removed. Remove all grease from the surface.

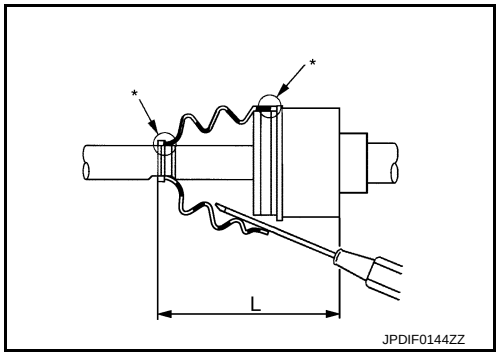

11. To prevent the deformation of the boot, adjust the boot installation length to the value shown below (L) by inserting the suitable tool into the inside of boot from the large diameter side of boot and discharging inside air.

    L : Refer to FAX-27, "Drive Shaft".

    CAUTION:
    - **If the boot installation length exceeds the standard, it may cause breakage of the boot.**
    - **Be careful not to touch the inside of the boot with the tip of tool.**
12. Secure housing and shaft, and then check that they are in the correct position when rotating boot. Install them with new boot band when the mounting positions become incorrect.

Inspection

INFOID:0000000009948803

INSPECTION AFTER REMOVAL

Check the following items, and replace the part if necessary.

- Move joint up/down, left/right, and in the axial directions. Check for motion that is not smooth and for significant looseness.
- Check boot for cracks, damage, and leakage of grease.
- Check the support bearing bracket for cracks, deformation and other damage.

INSPECTION AFTER DISASSEMBLY

Check the following items, and replace the part if necessary.

Shaft

Check shaft for runout, cracks, or other damage. Replace if necessary.

Dynamic Damper

Check damper for cracks or wear. Replace if necessary.

Joint Sub-Assembly (Wheel Side)

Check the following:
- Joint sub-assembly for rough rotation and excessive axial looseness.
- The inside of the joint sub-assembly for entry of foreign material.
- Joint sub-assembly for compression scars, cracks, and fractures inside of joint sub-assembly.

Replace joint sub-assembly if there are any non-standard conditions of components.

Housing and spider assembly (Transaxle Side)

Replace housing and spider assembly if there is scratching or wear of housing roller contact surface or spider roller contact surface.

NOTE:
Housing and spider assembly are used in a set.

Support Bearing (Right Side)

Check bearing rolls freely and is free from noise, cracks, pitting or wear. Replace support bearing if there are any non-standard conditions.

Support Bearing Bracket (Right Side)

Check for support bearing bracket, cracks, or damage. Replace support bearing bracket if there are any non-standard conditions.

INSPECTION AFTER INSTALLATION

1. Check wheel sensor harness for proper connection. Refer to BRC-110, "FRONT WHEEL SENSOR : Exploded View".
2. Adjust neutral position of steering angle sensor. Refer to BRC-9, "Special Repair Requirement".

SERVICE DATA AND SPECIFICATIONS (SDS)

SERVICE DATA AND SPECIFICATIONS (SDS)

Wheel Bearing

INFOID:0000000009948804

Item	Standard
Axial end play	0.05 mm (0.002 in) or less

Drive Shaft

INFOID:0000000009948805

Item			Left side	Right side
Grease quantity	Wheel side	MT	80 – 100 g (2.83 – 3.52 oz)	
		CVT	77 – 97 g (2.72 – 3.42 oz)	
	Transaxle side	MT	130 – 140 g (4.59 – 4.93 oz)	
		CVT	113 – 123 g (3.99 – 4.33 oz)	
Boots installed length	Wheel side	MT	141.7 mm (5.58 in)	
		CVT	136.0 mm (5.35 in)	
	Transaxle side	MT	155.7 mm (6.13 in)	167.7 mm (6.60 in)
		CVT	153.6 mm (6.05 in)	148.6 mm (5.85 in)
Dimension of dynamic damper		MT	230 – 236 mm (9.06 – 9.29 in)	
		CVT	225 – 231 mm (8.86 – 9.09 in)	