Chevrolet Suburban 2003 – 2006 fuse box diagram

Passenger Compartment Fuse Box

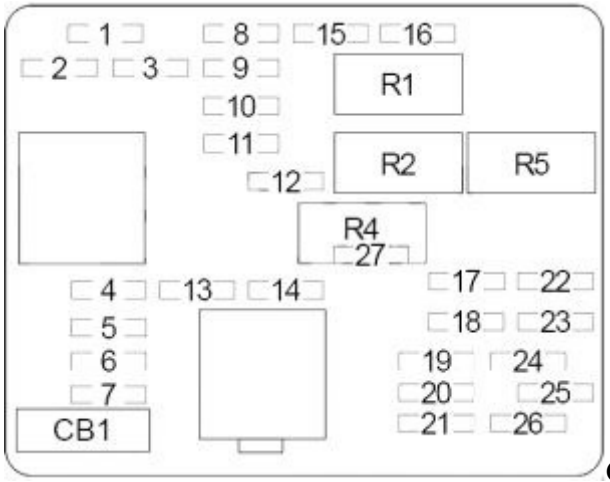

Chevrolet Suburan – fuse box diagram – passenger compartment

No.	A	Protected Component
1	15	Rear Wiper/Washer Switch
2	10	HVAC Components, Electronic Suspension Control (ESC) Components, Heated Seat Modules (Rear), Wheel Steering Control Module
3	15	Front Axle Actuator, Transfer Case Shift Control Switch
4	10	Passlock Sensor, Transmission Control Module (TCM), Powertrain Control Module (PCM)
5	15	Stop Lamps, Brake Module, Electronic Throttle Actuator Control
6	15	Driver Door Module (DDM)
7	10	HVAC Control Assembly (Rear Auxiliary)
8	10	Upfitter Provisions
9	30	HVAC Control Module
10	10	HVAC Control Module, HVAC Actuators, Inside Rearview Mirror

11	10	Cruise Control Switch, Steering Wheel Speed/Position Sensor
12	10	Stop Lamp Switch, Electronic Brake Control Module (EBCM), Traction Control Switch
13	10	Body Control Module (BCM)
14	10	Center High Mounted Stop Lamp (CHMSL)
15	25	Windshield Wiper Motor Module
16	10	Body Control Module (BCM)
17	10	Left Turn Signal/Stop Trailer
18	10	Right Turn Signal/Stop Trailer
19	20	Power Outlet (D-pillar)
20	15	Body Control Module (BCM)
21	15	Body Control Module (BCM)
22	10	Left Turn Signals and Side Markers Lamps, Instrument Panel Cluster, Driver Door Module (DDM)
23	10	Right Turn Signals and Side Markers Lamps, Instrument Panel Cluster, Front Passenger Door Module (FPDM)
24	20	Door Lock/Unlock Relay
25	25	Turn Signal/Hazard Flasher Module
26	15	Body Control Module (BCM)
27	10	Front Passenger Door Module (FPDM)
Circuit Breaker		

CB1	25	Left Power Window (Left Rear Power Window and Driver Door Module)
Relay		
R1	Power Door Lock	
R2	Power Door Unlock	
R4	–	
R5	Rear Fog Lamps	

Engine Compartment Fuse Box

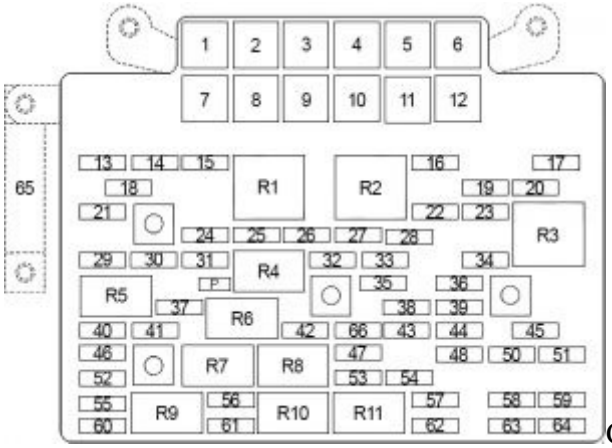

Chevrolet Suburban – fuse box diagram – engine compartment

No.	A	Protected Component
1	40	Trailer Wiring, Automatic Level Control (ALC) Compressor Relay
2	–	–
3	50	Circuit Breaker (Passenger Compartment Relay Box): “CB1”, “CB2”
4	40	Blower Motor
5	50	Fuse (Passenger Compartment): “6”, “19”, “24” “27”
6	30	Off-Road Lamps, Trailer Wiring
7	60	Electronic Brake Control Module (EBCM)
8	60	Electronic Brake Control Module (EBCM), Automatic Level Control (ALC) Compressor
9	40	Ignition Switch
10	–	–
11	40	Ignition Switch
12	50	Fuse (Passenger Compartment): “20”, “21”, “25” “26”, “CB1”
13	15	Parking Lamps Trailer Wiring

14	10	Right Rear Parking and Side Marker Lamps
15	10	Left Rear Parking and Side Marker Lamps
16	10	Interior Lamps
17	25	Stop Lamp Switch
18	10	Body Control Module (BCM), Pass-Key Module
19	25	Sunroof Relay
20	30	Roof Beacon Relay, Off-Road Lamps
21	15	Rear Wheel Steering Control Module, Evaporative Emission (EVAP) Canister Vent Solenoid
22	30	HVAC Control Assembly (Rear Auxiliary)
23	20	Accessory Power Outlets, Auxiliary Power Outlets
24	15	Powertrain Control Module (PCM), Mass Air Flow (MFS) Sensor, Evaporative Emission (EVAP) Canister Purge Solenoid, Fuel Composition Sensor, Secondary Fuel Pump Relay
25	15	Throttle Actuator Control (TAC), Electronic Brake Controller
26	15	Odd: Ignition Coils, Fuel Injectors
27	15	Even: Ignition Coils, Fuel Injectors
28	10	A/? Compressor Relay, Park/Neutral Position (PNP) Switch, Turn Signal/Multifunction Switch, Headlamp Leveling Components, Instrument Panel Cluster, Clutch Start Switch
29	30	Automatic Level Control (ALC) Compressor, Electronic Suspension Control (ESC) Module
30	10	Backup Lamps Trailer Wiring, Back-Up Alarm, Body Control Module (BCM)
31	20	Powertrain Control Module, Fuel Pump
32	15	Oxygen Sensors
33	20	Backup Lamps, Park/Neutral Position Switch (PNP)
34	30	Rear Window Defogger Relay
35	15	Oxygen Sensors
36	15	Inflatable Restraint Sensing and Diagnostic Module (SDM), Memory Seat Module (Passenger), Inside Reaview Mirror
37	10	Front Parking Lamps, Front Side Marker Lamps
38	10	Rear Window Defogger Relay, Instrument Panel Cluster (IPC), Rear Object Sensor Control Module, Selectable Ride Switch
39	10	Body Control Module (BCM)
40	10	Left Headlamp (High Beam)
41	20	Left Headlamp (Xenon)
42	10	Daytime Running Light Relay
43	10	Instrument Panel Cluster/Driver Information Center
44	10	HVAC Control Module
45	15	Cigarette Lighter, Data Link Connector

46	10	Right Headlamp (High Beam)
47	10	Air Conditioning Compressor Relay
48	25	Rear Wiper/Washer
49	–	–
50	15	Audio System, Digital Radio Receiver, Rear Seat Audio
51	15	Instrument Panel Cluster (IPC), Rear Fog Lamp Relay, Overhead Console, Roof Beacon Switch, Rear Heated Seats, HomeLink (Garage Door Opener)
52	10	Left Headlamp (Low Beam)
53	10	Brake Transmission Shift Interlock System
54	10	Starting System, Powertrain Control Module (Gasoline), Engine Control Module (Diesel), Transmission Control Module (TCM)
55	10	Right Headlamp (Low Beam)
56	15	Front Fog Lamps Relay
57	15	Windshield Washer Pump
58	15	Vehicle Communication Interface Module (VCIM), Rear Seat Entertainment (RSE) Assembly, Remote Playback Device-CD Player
59	30	Radio Amplifier
60	20	Right Headlamp (Xenon)
61	15	Horn
62	15	Electronic Adjustable Pedals (EAP) Relay
63	30	Transfer Case Encoder Motor, Transfer Case Shift Control Module
64	15	Supplemental Brake Assist Pump Motor, Fuel Pump Relay (Secondary)
65	125	Cust Feed
66	10	Generator Battery Control Module
Relay		
R1	Parking Lamps, Side Marker Lamps	
R2	Starter	
R3	Ignition	
R4	Fuel Pump	
R5	Headlamp High Beam	
R6	Daytime Running Light	
R7	Headlamp (Low Beam)	
R8	Air Conditioning Compressor	
R9	Front Fog Lamps	
R10	Horn	
R11	Windshield and Rear Window Washer Pump	

Engine Compartment Relay Box (10 Series)

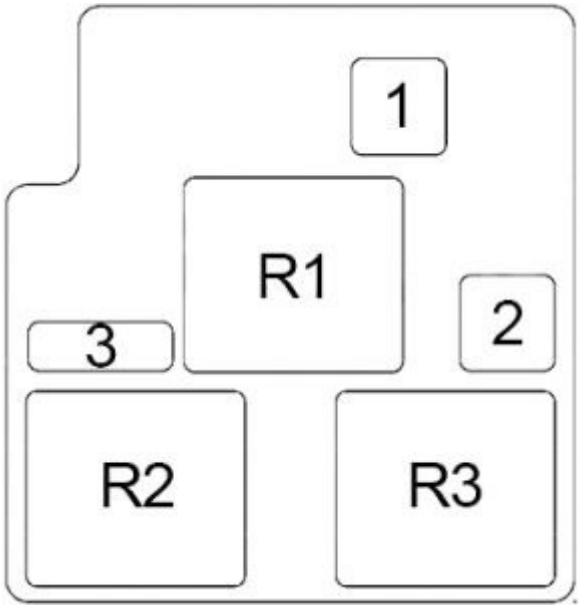

Chevrolet Suburban – fuse box diagram – engine compartment relay box

No.	A	Circuit Breaker
1	40	Cooling Fan Relay No.1
2	40	Cooling Fan Relay No.2
3	10	Cooling Fan Relay No.3
Relay		
R1	Cooling Fan (Left)	
R2	Cooling Fan (Left/Right – High Speed)	
R3	Cooling Fan (Left/Right – Low Speed)	

Passenger Compartment Relay Box

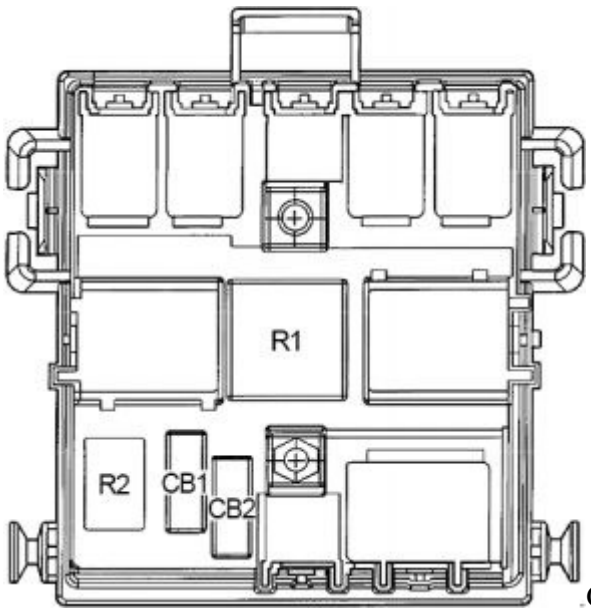

Chevrolet Suburban – fuse box diagram – passenger compartment relay box

No.	A	Circuit Breaker
CB1	30	Driver and Passenger Seat Module, Memory Seat Module
CB2	25	Right Power Window (Front Passenger Door Module (FPDM), Right Rear Power Window)
Relay		
R1	Rear Window Defogger	
R2	–	