## WE REALLY CARE ABOUT YOU — PLEASE BUCKLE UP

**Toyota has made a special effort to encourage use of seat belts.**

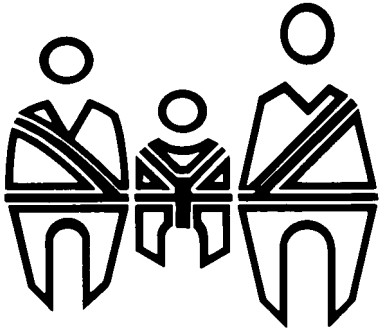

**Toyota belts are:**

- **Comfortable**
- **Easy to use**
- **Convenient**

**We encourage you to use your belts every time you drive.**

# Part 1
# OPERATION OF INSTRUMENTS AND CONTROLS—

## Chapter 1-1
## Overview of instruments and controls

- Instrument panel overview
- Instrument cluster overview
- Indicator symbols on the instrument panel

## Instrument panel overview

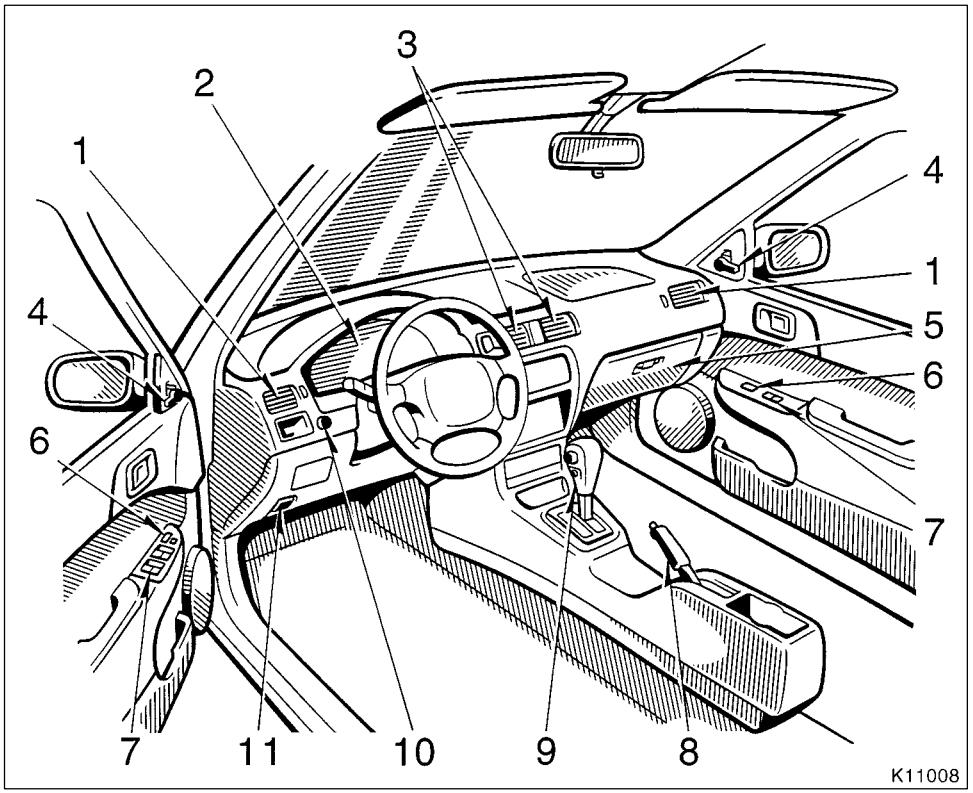


1. Side vents
2. Instrument cluster
3. Center vents
4. Rear view mirror remote control levers
5. Glovebox
6. Power door lock switches
7. Power window switches
8. Parking brake lever
9. Automatic transmission selector lever or manual transmission gear shift lever
10. Instrument panel light control knob
11. Hood lock release lever

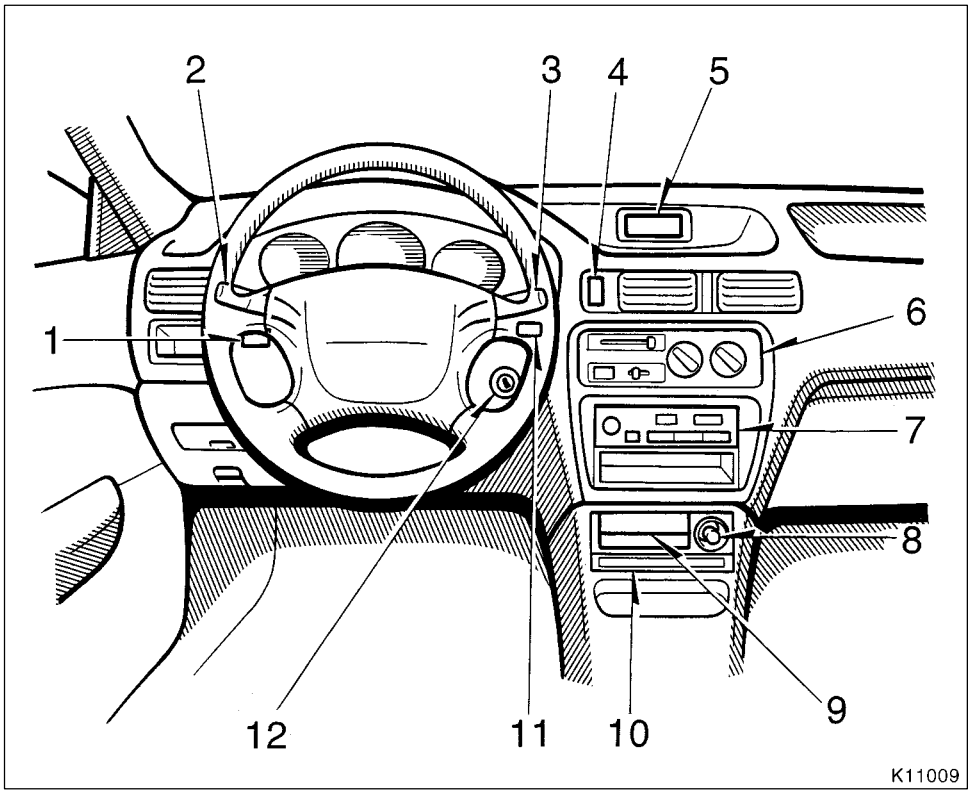


1. Rear window defogger switch
2. Headlight and turn signal switch
3. Wiper and washer switches
4. Emergency flasher switch
5. Clock
6. Air conditioning controls
7. Car audio
8. Cigarette lighter
9. Ashtray
10. Cup holders
11. Front passenger’s seat belt reminder light
12. Ignition switch

## Instrument cluster overview

**▶With tachometer**

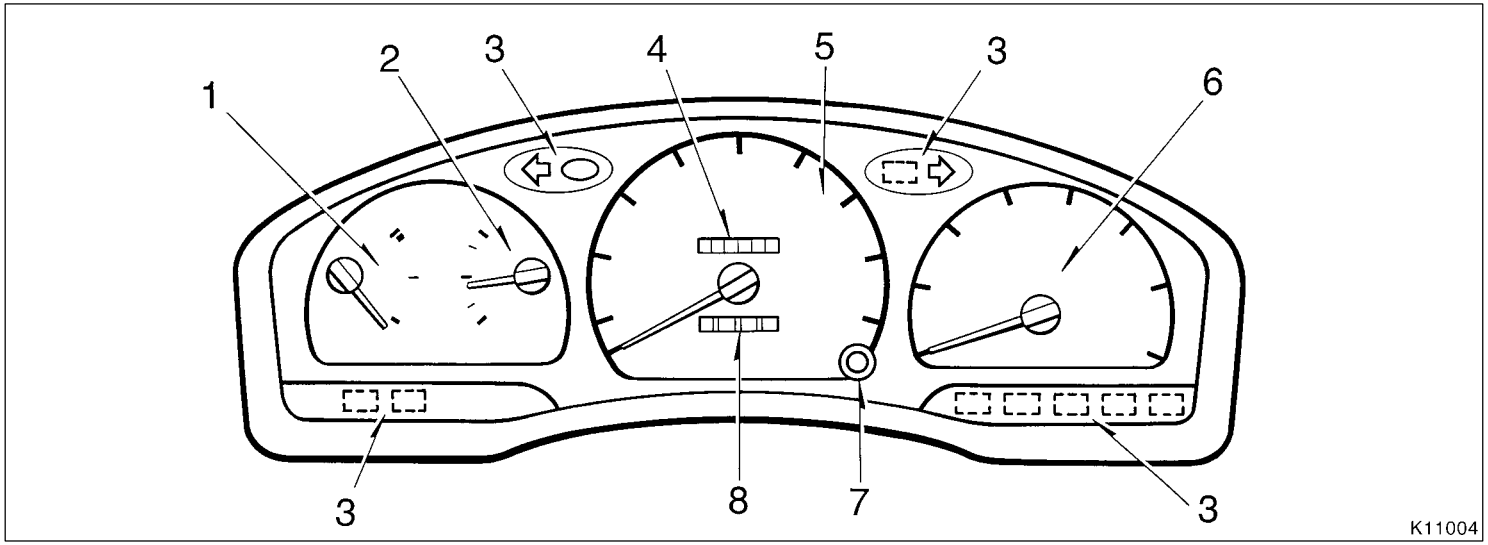


1. Engine coolant temperature gauge
2. Fuel gauge
3. Service reminder indicators and indicator lights
4. Odometer
5. Speedometer
6. Tachometer
7. Trip meter reset knob
8. Trip meter

**▶Without tachometer**

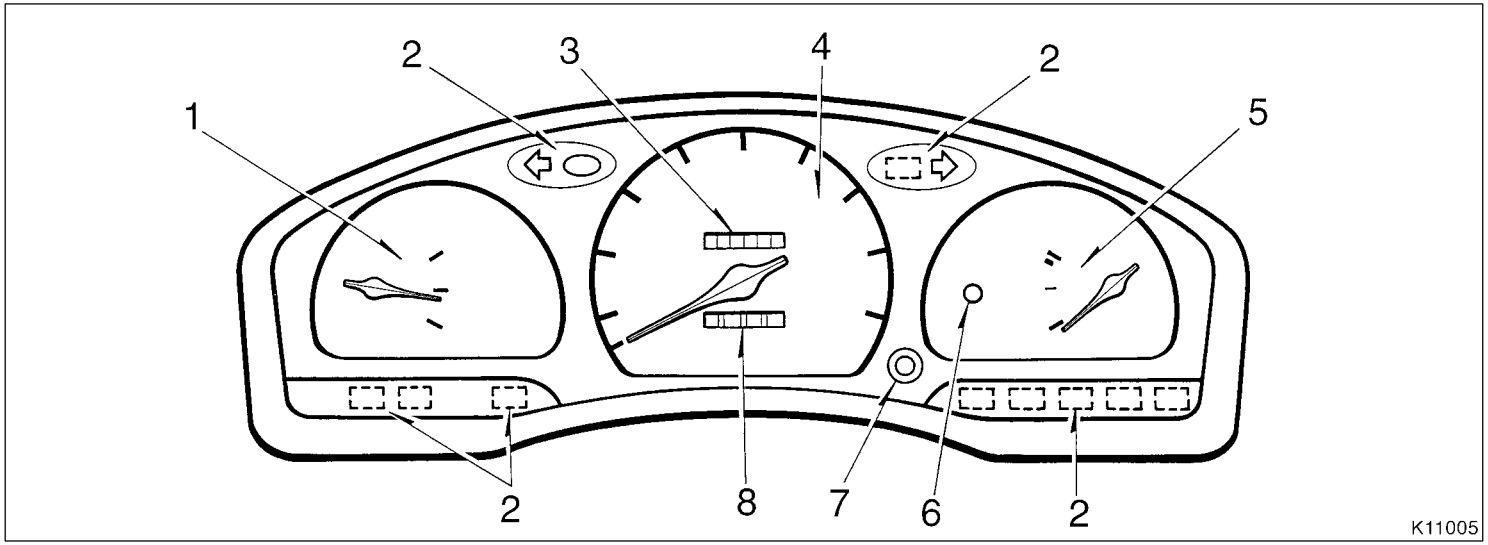


1. Fuel gauge
2. Service reminder indicators and indicator lights
3. Odometer
4. Speedometer
5. Engine coolant temperature gauge
6. Theft deterrent system indicator light
7. Trip meter reset knob
8. Trip meter

## Indicator symbols on the instrument panel

| | |
|---|---|
| BRAKE (type A) (type B) | Brake system warning light* |
| | Driver’s Seat belt reminder light* |
| PASSENGER | Front passenger’s seat belt reminder light* |
| | Discharge warning light* |
| | Low oil pressure warning light* |
| CHECK | Malfunction indicator lamp* |

| | |
|---|---|
| ABS (type A) (type B) | Anti-lock brake system warning light* |
| | Open door warning light* |
| | SRS airbag warning light* |
| | Turn signal indicator lights |
| | Headlight high beam indicator light |
| O/D OFF | Overdrive-off indicator light |

The indicators marked with * are service reminder indicators. For details, see ”Service reminder indicators and warning buzzer” in Chapter 1-5.

# Part 1
# OPERATION OF INSTRUMENTS AND CONTROLS—

## Chapter 1-2
## Keys and Doors


- Keys
- Side doors
- Power windows
- Trunk lid
- Hood
- Theft deterrent system
- Fuel tank cap


### Keys

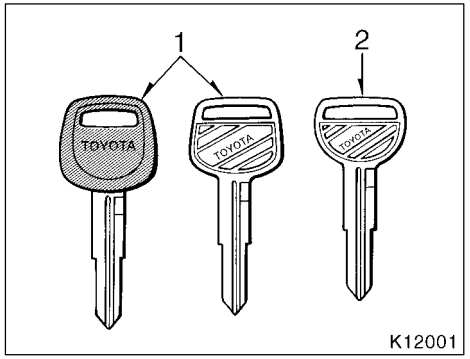


**Type A**

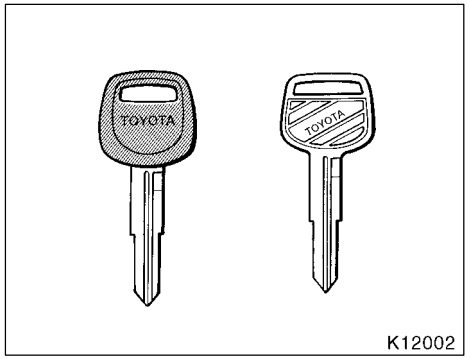


**Type B**

**KEY PLATE**

Type A—

**Your vehicle is supplied with two kinds of key.**

1. Master key—This key works in every lock.
2. Sub key—This key will not work in the trunk.

To protect things locked in the trunk when you have your vehicle parked, leave the sub key with the attendant.

Since the doors and trunk lid can be locked without a key, you should always carry a spare master key in case you accidentally lock your keys inside the vehicle.

Type B—

**This key works in every lock.**

Since the doors and trunk lid can be locked without a key, you should always carry a spare key in case you accidentally lock your key inside the vehicle.

## Side doors

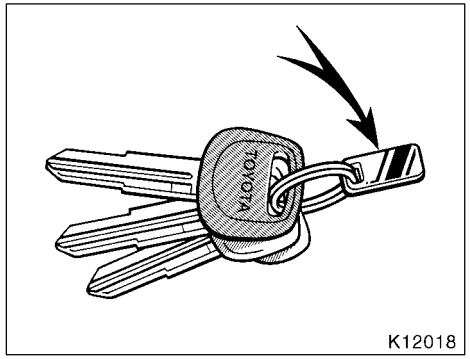


### KEY NUMBER PLATE

**Your key number is shown on the plate. Keep the plate in a safe place such as your wallet, not in the vehicle.**

If you should lose your keys or if you need additional keys, duplicates can be made by a Toyota dealer using the key number.

We recommend you to write down the key number and keep it in safe place.

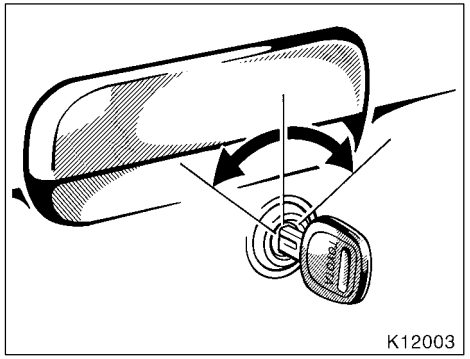


### LOCKING AND UNLOCKING WITH KEY

**Insert the key into the keyhole and turn it.**

To lock: Turn the key forward.
To unlock: Turn the key backward.

Vehicles with power door lock system—All the doors lock and unlock simultaneously with either front door. In the driver’s door lock, turning the key once will unlock the driver’s door and twice in succession will unlock all the doors simultaneously.

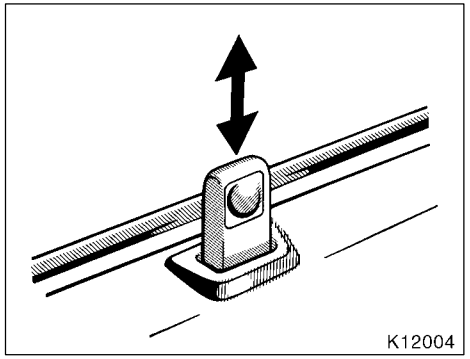


### LOCKING AND UNLOCKING WITH INSIDE LOCK BUTTON

**Move the lock button.**

To lock: Push the button downward.
To unlock: Pull the button upward.

Closing the door with the lock button pushed in will also lock the door. Be careful not to lock your keys in the vehicle.

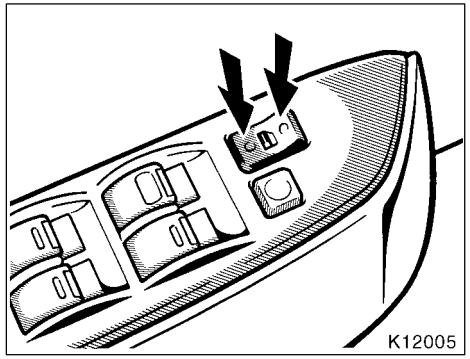


**Driver’s side**

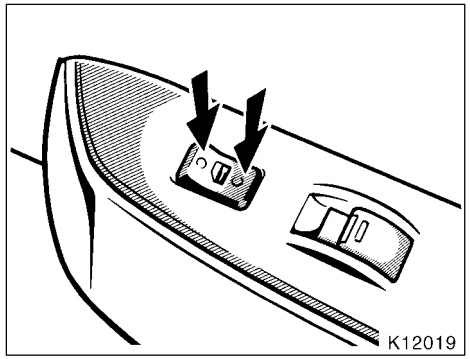


**Passenger’s side**

**LOCKING AND UNLOCKING WITH POWER DOOR LOCK SWITCH**

**Push the switch.**

To lock: Push the switch on the front side. To unlock: Push the switch on the rear side.

All the doors lock or unlock simultaneously.

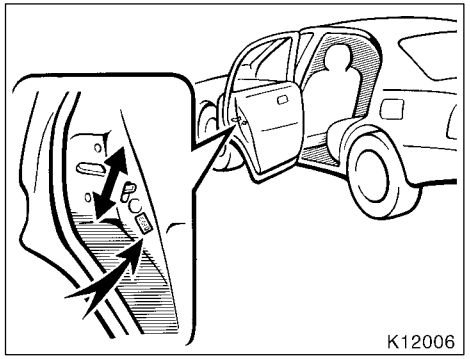


**REAR DOOR CHILD- PROTECTORS**

**Move the lock lever to the ”LOCK” position as shown on the label.**

This feature allows you to lock a rear door so it can be opened from the outside only, not from inside. We recommend using this feature whenever small children are in the vehicle.

**⚠ CAUTION**

**Before driving, be sure that the doors are closed and locked, especially when small children are in the vehicle. Along with the proper use of seat belts, locking the doors helps prevent the driver and passengers from being thrown out from the vehicle during an accident. It also helps prevent the doors from being opened unintentionally.**

## Power windows

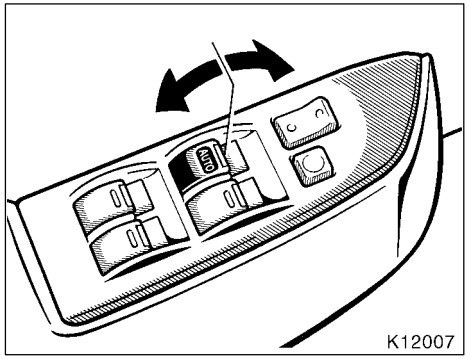


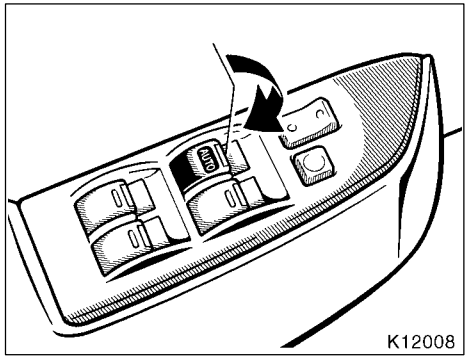


**The windows can be operated with the switch on each door.**

The ignition key must be in the ”ON” position.

**OPERATING THE DRIVER’S WINDOW**

**Use the switch on the driver’s door.**

**Normal operation:** The window moves as long as you hold the switch.

To open: Lightly push down the switch.
To close: Pull up the switch.

**Automatic operation (to open only):** Push the switch completely down and then release it. The window will fully open. To stop the window partway, lightly pull the switch up and then release it.

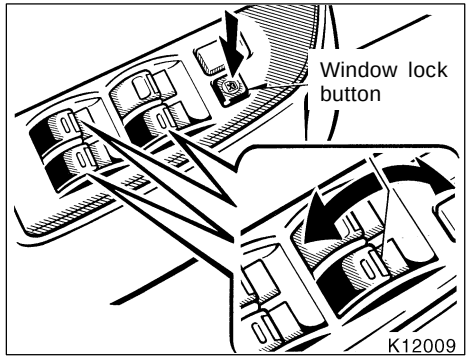


**OPERATING THE PASSENGERS’ WINDOWS**

**Use the switch on each passengers’ door or the switches on the driver’s door that control each passengers’ window.**

The window moves as long as you hold the switch.

To open: Push down the switch.
To close: Pull up the switch.

If you push in the window lock button on the driver’s door, the passengers’ windows cannot be operated.

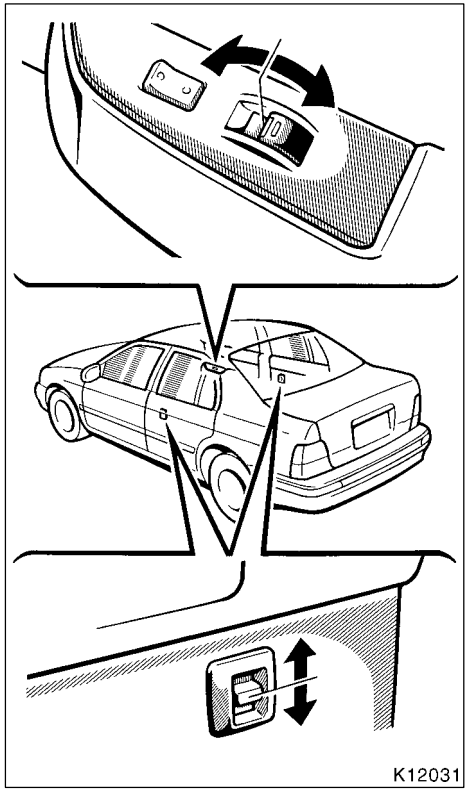


**⚠ CAUTION**

**To avoid serious personal injury, you must do the following.**

- **Always make sure the head, hands and other parts of the body of all occupants are kept completely inside the vehicle before you close the power windows. If someone’s neck, head or hands gets caught in a closing window, it could result in a serious injury. When anyone closes the power windows, be sure that they operate the windows safely.**
- **When small children are in the vehicle, never let them use the power window switches without supervision. Use the window lock button to prevent them from making unexpected use of the switches.**
- **Never leave small children alone in the vehicle, especially with the ignition key still inserted. They could use the power window switches and get trapped in a window. Unattended children can become involved in serious accidents.**

## Trunk lid—

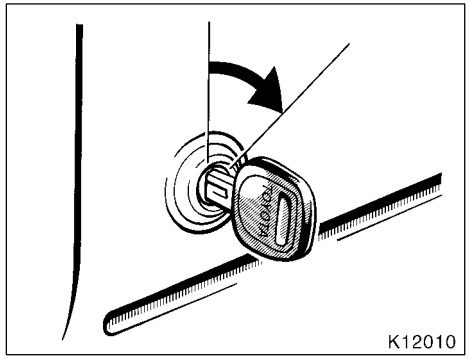


**To open the trunk lid from the outside, insert the master key and turn it clockwise.**

See ”Luggage stowage precautions” in Part 2 for precautions to observe for loading luggage.

To close the trunk lid, lower it and press down on it. After closing the trunk lid, try pulling it up to make sure it is securely closed.

**⚠ CAUTION**

**Keep the trunk lid closed while driving. This not only keeps the luggage from being thrown out but also prevents exhaust gases from entering the vehicle.**

## —Lock release lever

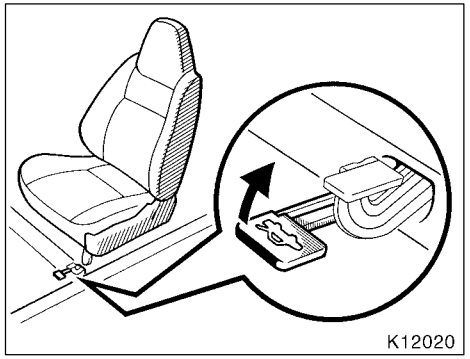


**To open the trunk lid from the driver’s seat, pull up on the lock release lever.**

## —Luggage security system

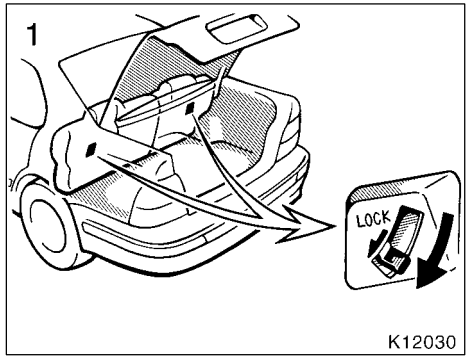


**This system deactivates the lock release lever so that things locked in the trunk can be protected.**

1. **Push down the security lock levers to lock the rear seatbacks.**

After locking the rear seatbacks, try folding them down to make sure they are securely locked, otherwise someone could get into the trunk by folding down a rear seat.

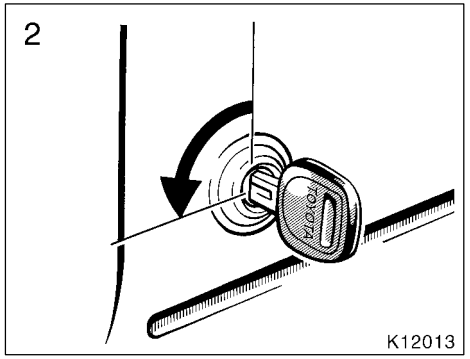


2. **After closing the trunk lid, insert the master key and turn it counterclockwise to deactivate the lock release lever.**

After closing the trunk lid, try pulling it up to make sure it is securely closed.

## Hood

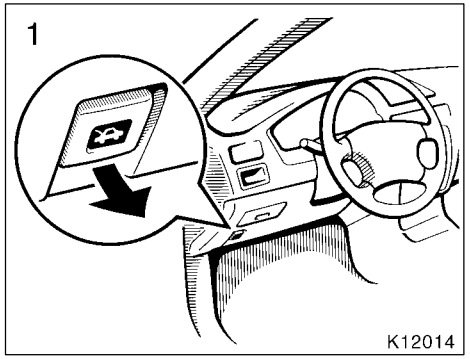


**To open the hood:**

1. **Pull the hood lock release lever. The hood will spring up slightly.**

**⚠ CAUTION**

**Before driving, be sure that the hood is closed and securely locked. Otherwise, the hood may open unexpectedly while driving and an accident may occur.**

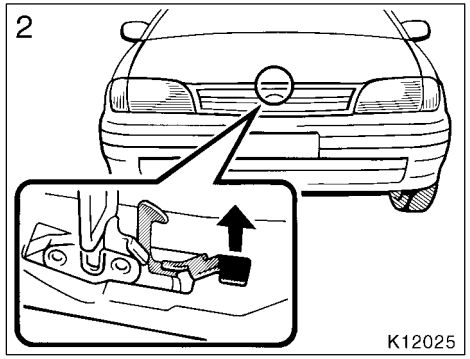


**2. In front of the vehicle, pull up on the auxiliary catch lever and lift the hood.**

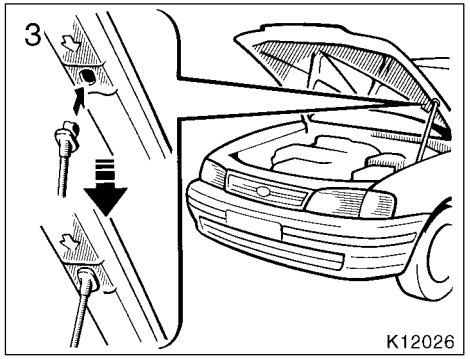


**3. Hold the hood open by inserting the support rod into the slot.**

Before closing the hood, check to see that you have not forgotten any tools, rags, etc. and return the support rod to its clip– this prevents rattles. Then lower the hood and make sure it locks into place. If necessary, press down gently on the front edge to lock it.

**⚠ CAUTION**

**After inserting the support rod into the slot, make sure the rod supports the hood securely from falling down on to your head or body.**

## Theft deterrent system (for Puerto Rico)

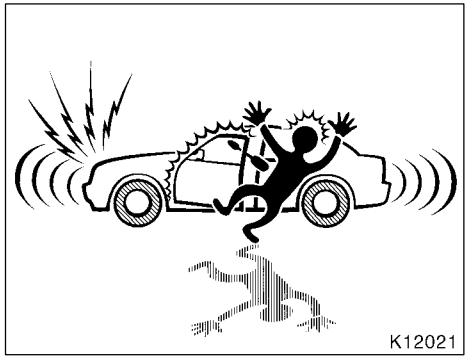


**To deter the vehicle theft, the system is designed to give an alarm and keep the engine from being started if any of the doors, trunk or hood is forcibly unlocked or the battery terminal is disconnected and then reconnected when the vehicle is locked.**

The alarm blows the horn intermittently and flashes the headlights, tail lights and other exterior lights. The engine cannot be started because the starter circuit will be cut.

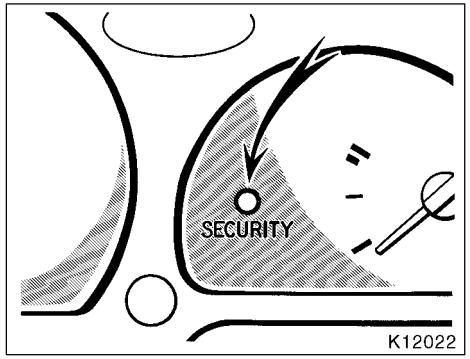


**SETTING THE SYSTEM**

1. Turn the ignition key to the ”LOCK” position and remove it.
2. Have all passengers get out of the vehicle.
3. Close and lock all the doors, trunk and hood.

The indicator light will come on when all the doors, trunk and hood are closed and locked.

As the doors are locked, the system will give you a preparation time of 30 seconds before the setting, during which the doors, trunk and hood may be opened.

Be careful not to use the key when opening either front door. This will cancel the system.

4. After making sure the indicator light starts flashing, you may leave the vehicle.

The system will automatically be set after the preparation time passes. The indicator light will flash to show the system is set. If any of the doors, trunk or hood is open at that time, the setting is interrupted until it is closed and locked.

Never leave anyone in the vehicle when you set the system, because unlocking from the inside will activate the system.

**WHEN THE SYSTEM IS SET**

**Activating the system**

The system will give the alarm and cut the starter circuit under the following conditions:

- If any of the doors, trunk or hood is unlocked without using the key
- If the battery terminal is disconnected and then reconnected

After one minute, the alarm will automatically stop with the starter circuit cut kept on.

**Reactivating the alarm**

Once set, the system automatically resets the alarm each time all the doors, trunk and hood are closed after the alarm stops.

The alarm will be activated again under the following conditions:

- If any of the doors, trunk or hood is opened
- If the battery terminal is disconnected and then reconnected

**Stopping the alarm**

Turn the ignition key from the ”LOCK” to ”ACC” position. The alarm will be stopped with the starter circuit cut kept on. Stopping the alarm in this manner will keep the alarm from being reactivated when any of the doors, trunk or hood is opened.

**Interrupting the setting**

With the system set, the trunk can be opened with the key without activating or cancelling the system. While it is open, it the doors and hood may be opened in addition. However, when the battery terminal is disconnected and then reconnected, the system is activated.

To resume the setting, close and lock all the doors, trunk and hood. The trunk must be closed with the key removed.

**CANCELLING THE SYSTEM**

Unlock either front door with the key. This cancels the system completely and the starter circuit cut will be cancelled at once.

**INDICATOR LIGHT**

The indicator light gives the following three indications.

FLASHING—The system is set. You need the key to open the doors, trunk and hood.

ON—The system will automatically be set when the time comes. The doors, trunk and hood may be opened without a key.

OFF—The system is inactive. You may open any door, trunk and hood.

**TESTING THE SYSTEM**

1. Open all the windows.
2. Set the system as described above. The front doors should be locked with the key. Be sure to wait until the indicator light starts flashing.
3. Unlock one of the doors from the inside. The system should activate the alarm.
4. Cancel the system by unlocking either front door with the key.
5. Repeat this operation for the other doors, trunk and hood. When testing on the hood, also check that the system is activated when the battery terminal is disconnected and then reconnected.

If the system does not work properly, have it checked by your Toyota dealer.

## Fuel tank cap

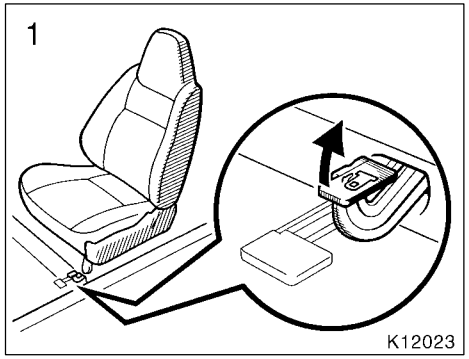


**Lever type**

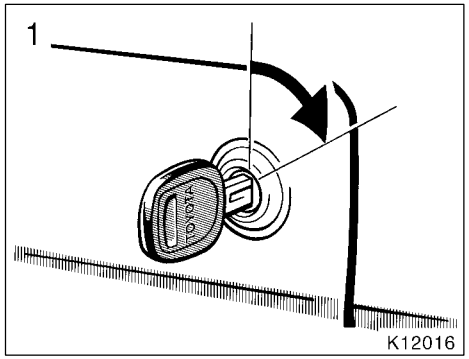


**Key type**

**1. To open the fuel filler door, do this.**

Lever type—Pull up the lever.
Key type—Turn the key clockwise in the fuel filler door.

**When refueling, turn off the engine.**

**⚠ CAUTION**

- **Do not smoke, cause sparks or allow open flames when refueling. The fumes are flammable.**
- **When opening the cap, do not remove the cap quickly. In hot weather, fuel under pressure could cause injury by spraying out of the filler neck if the cap is suddenly removed.**

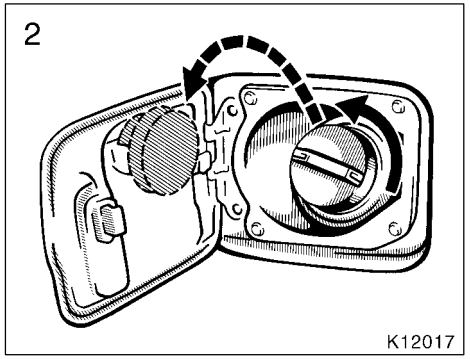


**2. To remove the fuel tank cap, turn the cap slowly counterclockwise, then pause slightly before removing it. After removing the cap, hang it on the cap hanger.**

It is not unusual to hear a slight swoosh when the cap is opened. When installing, turn the cap clockwise till you hear a click.

If the cap is not tightened securely, the malfunction indicator lamp comes on. Make sure the cap is tightened securely.

The indicator lamp goes off after driving several times. If the indicator lamp does not go off, contact your Toyota dealer as soon as possible.

**⚠ CAUTION**

- **Make sure the cap is tightened securely to prevent fuel spillage in case of an accident.**
- **Use only a genuine Toyota fuel tank cap for replacement. It has a built-in check valve to reduce fuel tank vacuum.**

# Part 1
# OPERATION OF INSTRUMENTS AND CONTROLS—

## Chapter 1-3
## Seats, Seat belts and Mirrors

- Seats
- Front seats
- Fold-down rear seat
- Head restraints
- Seat belts
- SRS driver and front passenger airbags
- SRS driver airbag
- Child restraint
- Outside rear view mirrors
- Anti-glare inside rear view mirror

### Seats

While the vehicle is being driven, all vehicle occupants should have the seatback upright, sit well back in the seat and properly wear the seat belts provided.

**⚠ CAUTION**

- **Do not drive the vehicle unless the occupants are properly seated. Do not allow sitting on top of a folded-down seatback, or in the luggage compartment. Persons not properly seated and not properly restrained by seat belts can be severely injured in the event of emergency braking or a collision.**
- **During driving, do not allow passengers to stand up or move around between seats. Severe injuries can occur in the event of emergency braking or a collision.**

### Front seats—
### —Seat adjustment precautions

Adjust the driver's seat so that the foot pedals, steering wheel and instrument panel controls are within easy reach of the driver.

**⚠ CAUTION**

- **Adjustments should not be made while the vehicle is moving, as the seat may unexpectedly move and cause the driver to lose control of the vehicle.**
- **When adjusting the seat, be careful not to hit the seat against a passenger or luggage.**
- **After adjusting the seat position, try sliding it forward and backward to make sure it is locked in position.**
- **After adjusting the seatback, exert body pressure to make sure it is locked in position.**
- **Do not put objects under the seats. The objects may interfere with the seat-lock mechanism or unexpectedly push up the seat position adjusting lever; the seat may suddenly move, causing the driver to lose control of the vehicle.**

## —Adjusting front seats

- **While adjusting the seat, do not put your hands under the seat or near the moving parts. You may catch and injure your hands or fingers.**

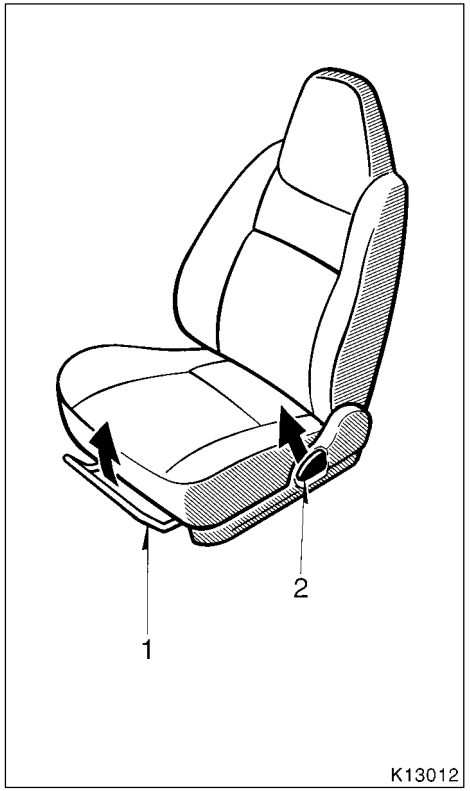


**1. SEAT POSITION ADJUSTING LEVER**

**Pull the lever up. Then slide the seat to the desired position with slight body pressure and release the lever.**

**2. SEATBACK ANGLE ADJUSTING LEVER**

**Lean forward and pull the lever up. Then lean back to the desired angle and release the lever.**

**⚠ CAUTION**

**To reduce the risk of sliding under the lap belt during a collision, avoid reclining the seatback any more than needed. The seat belts provide maximum protection in a frontal or rear collision when the driver and the passenger are sitting up straight and well back in the seats. If you are reclined, the lap belt may slide past your hips and apply restraint forces directly to the abdomen. Therefore, in the event of a frontal collision, the risk of personal injury may increase with increasing recline of the seatback.**

## —Moving passenger’s seat for rear seat entry (2-door models)

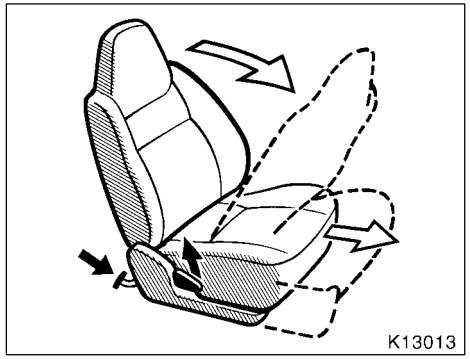


**For easy access to the rear seat, do this.**

1. Lift the seatback angle adjusting lever or press the pedal behind the seatback.

The seat will slide forward.

2. Move the seat to the front-most position.

After passengers are in, lift up the seatback and return the seat until it locks.

**⚠ CAUTION**

- **After putting back the seat, try pushing the seat forward and rearward to make sure it is secured in place.**
- **Never allow anyone to rest their foot on the release pedal while the vehicle is moving.**

## Fold-down rear seat

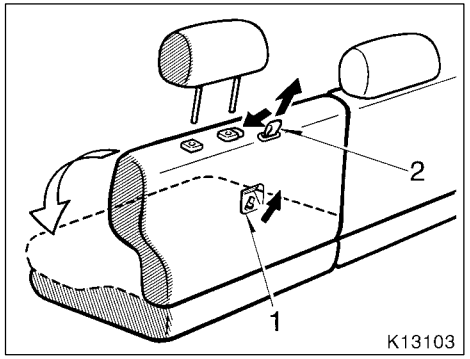


1. **Remove the head restraint. Pull up the seatback security lock lever 1 to the unlock position.**
2. **Pull out the lock release strap 2.**
3. **Fold down the seatback.**

Each seatback may be folded separately.

This will enlarge the trunk as far as the front seatbacks. See ”Luggage stowage precautions” in Part 2 for precautions to observe for loading luggage.

**⚠ CAUTION**

**When returning the seatback to the upright position:**

- **Make sure the seat belts are not twisted or caught in the seatback and are arranged in their proper position and are ready to use.**
- **Make sure the seatback is securely locked by pushing forward and rearward on the top of the seatback. Be certain to replace head restraints.**

## Head restraints

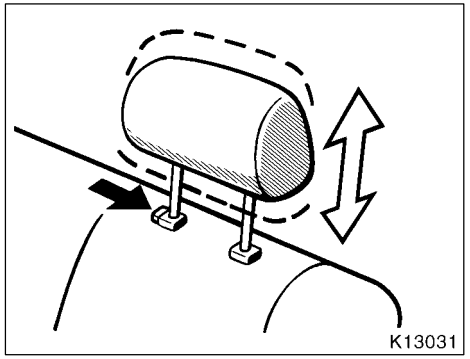


**For your safety and comfort, adjust the head restraint before driving.**

To raise: Pull it up.
To lower: Push it down while pressing lock release button.

The head restraint is most effective when it is close to your head. Therefore, using a cushion on the seatback is not recommended.

**⚠ CAUTION**

- **Adjust the center of the head restraint so that it is closest to the top of your ears.**
- **After adjusting the head restraint, make sure it is locked in position.**
- **Do not drive with the head restraints removed.**

## Seat belts—
## —Seat belt precautions

Toyota strongly urges that the driver and passengers in the vehicle be properly restrained at all times with the seat belts provided. Failure to do so could increase the chance of injury and/or the severity of injury in accidents.

**Child.** Use a child restraint system appropriate for the child until the child becomes large enough to properly wear the vehicle’s seat belts. See ”Child restraint” for details.

If a child is too large for a child restraint system, the child should sit in the rear seat and must be restrained using the vehicle’s seat belt. According to accident statistics, the child is safer when properly restrained in the rear seat than in the front seat.

If a child must sit in the front seat, the seat belts should be worn properly. If an accident occurs and the seat belts are not worn properly, the force of the rapid inflation of the airbag may cause death or serious injury to the child.

Do not allow the child to stand up or kneel on either rear or front seats. An unrestrained child could suffer serious injury or death during emergency braking or a collision. Also, do not let the child sit on your lap. It does not provide sufficient restraint.

**Pregnant woman.** Toyota recommends the use of a seat belt. Ask your doctor for specific recommendations. The lap belt should be worn securely and as low as possible over the hips and not on the waist.

**Injured person.** Toyota recommends the use of a seat belt. Depending on the injury, however, first check with your doctor for specific recommendations.

**⚠ CAUTION**

**Persons should ride in their seats properly wearing their seat belts whenever the vehicle is moving. Otherwise, they are much more likely to suffer serious bodily injury or death in the event of sudden braking or a collision.**

**When using the seat belts, observe the following:**

- **Use the belt for only one person at a time. Do not use a single belt for two or more people–even children.**
- **Avoid reclining the seatbacks too much. The seat belts provide maximum protection when the seatbacks are in the upright position. (Refer to the seat adjustment instructions.)**
- **Be careful not to damage the belt webbing or hardware. Take care that they do not get caught or pinched in the seat or side doors.**
- **Inspect the belt system periodically. Check for cuts, fraying, and loose parts. Damaged parts should be replaced. Do not disassemble or modify the system.**

- **Keep the belts clean and dry. If they need cleaning, use a mild soap solution or lukewarm water. Never use bleach, dye, or abrasive cleaners—they may severely weaken the belts. (See ”Cleaning the interior” in Part 5.)**
- **Replace the belt assembly (including bolts) if it has been used in a severe impact. The entire assembly should be replaced even if damage is not obvious.**

## —Front seat belts and rear outside seat belts

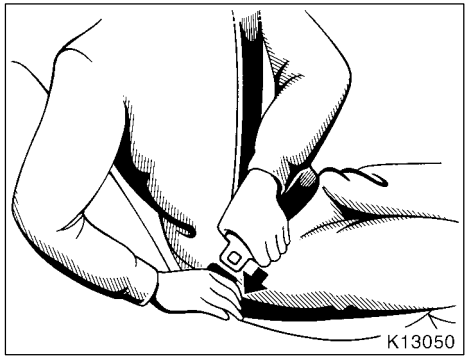


**Adjust the seat as needed (front seats only) and sit up straight and well back in the seat. To fasten your belt, pull it out of the retractor and insert the tab into the buckle.**

You will hear a click when the tab locks into the buckle.

The seat belt length automatically adjusts to your size and the seat position.

The retractor will lock the belt during a sudden stop or on impact. It also may lock if you lean forward too quickly. A slow, easy motion will allow the belt to extend, and you can move around freely.

If the seat belt cannot be pulled out of the retractor, firmly pull the belt and release it. You will then be able to smoothly pull the belt out of the retractor.

When a passenger’s shoulder belt is completely extended and is then retracted even slightly, the belt is locked in that position and cannot be extended. This feature is used to hold the child restraint system securely. (For details, see ”Child restraint” in this chapter.) To free the belt again, fully retract the belt and then pull the belt out once more.

**⚠ CAUTION**

- **After inserting the tab, make sure the tab and buckle are locked and that the belt is not twisted.**
- **Do not insert coins, clips, etc. in the buckle as this may prevent you from properly latching the tab and buckle.**
- **If the seat belt does not function normally, immediately contact your Toyota dealer. Do not use the seat until the seat belt is fixed. It cannot protect an adult occupant or your child from injury.**

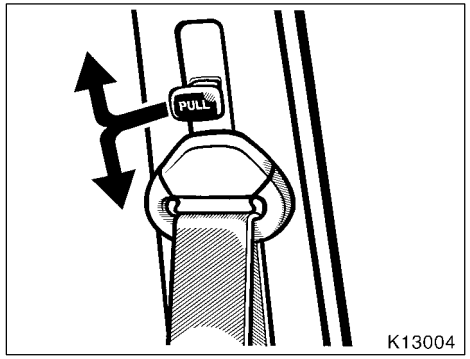


**Seat belts with an adjustable shoulder anchor—**

**Adjust the shoulder anchor position to your size.**

To adjust the anchor position, pull the knob out and slide it up or down. Release the knob and make sure the anchor is locked in position.

**⚠ CAUTION**

**Always make sure the shoulder belt is positioned across the center of your shoulder. The belt should be kept away from your neck, but not falling off your shoulder. Failure to do so could reduce the amount of protection in an accident and cause serious injuries in a collision.**

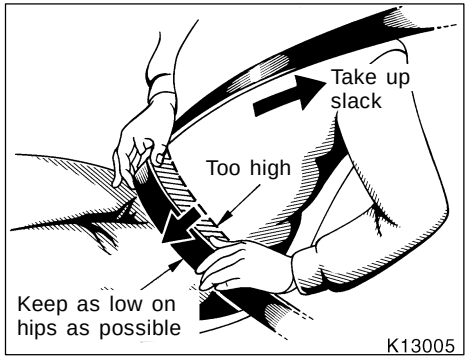


**Adjust the position of the lap and shoulder belts.**

Position the lap belt as low as possible on your hips—not on your waist, then adjust it to a snug fit by pulling the shoulder portion upward through the latch plate.

**⚠ CAUTION**

- **High-positioned lap belts and loose-fitting belts both could cause serious injuries due to sliding under the lap belt during a collision or other unintended result. Keep the lap belt positioned as low on hips as possible.**
- **For your safety, do not place the shoulder belt under your arm.**

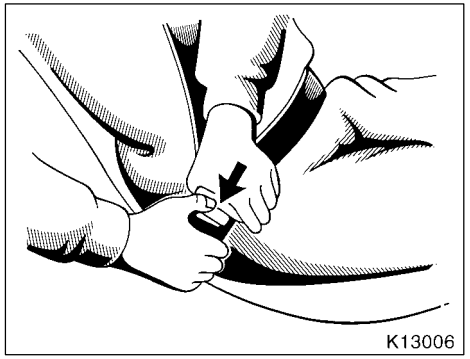


**To release the belt, press the buckle-release button and allow the belt to retract.**

If the belt does not retract smoothly, pull it out and check for kinks or twists. Then make sure it remains untwisted as it retracts.

## —Rear center seat belt

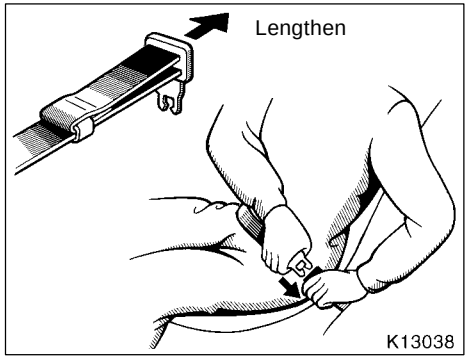


**Sit up straight and well back in the seat. To fasten your belt, insert the tab into the buckle.**

You will hear a click when the tab locks into the buckle.

If the belt is not long enough for you, hold the tab at a right angle to the belt and pull on the tab.

**⚠ CAUTION**

- **After inserting the tab, make sure the tab and buckle are locked and that the belt is not twisted.**
- **Do not insert coins, clips, etc. in the buckle as this may prevent you from properly latching the tab and buckle.**
- **If the seat belt does not function normally, immediately contact your Toyota dealer. Do not use the seat until the seat belt is fixed. It cannot protect an adult occupant or your child from injury.**

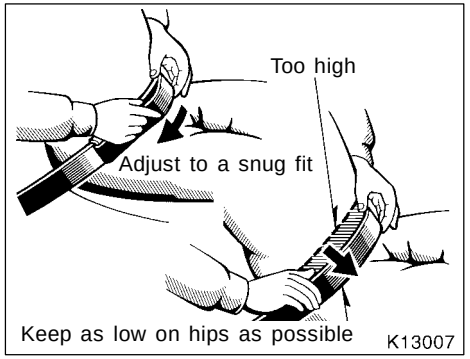


**Remove excess length of the belt and adjust the belt position.**

To shorten the belt, pull the free end of the belt.

Position the lap belt as low as possible on your hips—not on your waist, then adjust it to a snug fit.

**⚠ CAUTION**

**High-positioned and loose-fitting lap belts could cause serious injuries due to sliding under the lap belt during a collision or other unintended result. Keep the lap belt positioned as low on hips as possible.**

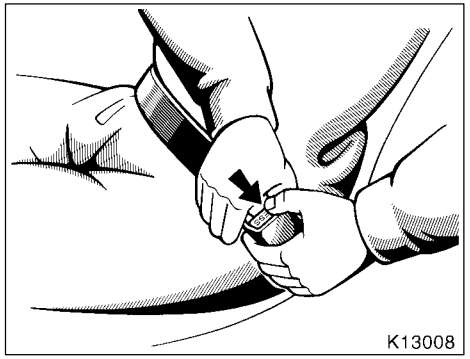


**To release the belt, press the buckle-release button.**

## —Seat belt extender

If your seat belt cannot be fastened securely because it is not long enough, a personalized seat belt extender is available from your Toyota dealer free of charge.

Please contact your local Toyota dealer so that the dealer can order the proper required length for the extender. Bring the heaviest coat you expect to wear for proper measurement and selection of length. Additional ordering information is available at your Toyota dealer.

**⚠ CAUTION**

**When using the seat belt extender, observe the following. Failure to follow these instructions could result in less effectiveness of the seat belt restraint system in case of vehicle accident, increasing the chance of personal injury.**

- **Never use the seat belt extender if you can fasten the seat belt without it.**

- **Remember that the extender provided for you may not be safe when used on a different vehicle, or for another person or at a different seating position than the one originally intended for.**

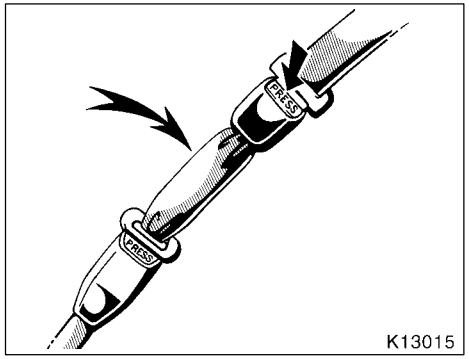


**To connect the extender to the seat belt, insert the tab into the seat belt buckle so that the ”PRESS” signs on the buckle-release buttons of the extender and the seat belt are both facing outward as shown.**

You will hear a click when the tab locks into the buckle.

When releasing the seat belt, press on the buckle-release button on the extender, not on the seat belt. This helps prevent damage to the vehicle interior and extender itself.

When not in use, remove the extender and store in the vehicle for future use.

**CAUTION**

- **After inserting the tab, make sure the tab and buckle are locked and that the seat belt extender is not twisted.**
- **Do not insert coins, clips, etc. in the buckle as this may prevent you from properly latching the tab and buckle.**
- **If the seat belt does not function normally, immediately contact your Toyota dealer. Do not use the seat until the seat belt is fixed. It cannot protect an adult occupant or your child from injury.**

## —Front seat belt pretensioners

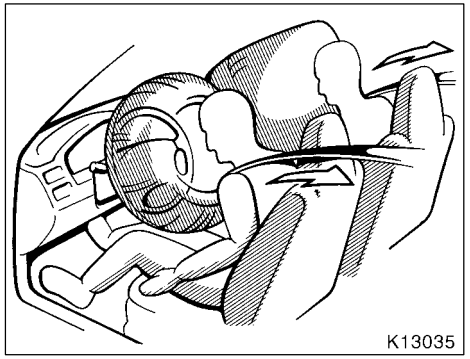


**The driver and front passenger’s seat belt pretensioners are designed to be activated in response to a severe frontal impact.**

When the airbag sensor detects the shock of a severe frontal impact, the front seat belt is quickly drawn back in by the retractor so that the belt snugly restrains the front seat occupants.

The seat belt pretensioners are activated even with no passenger in the front seat.

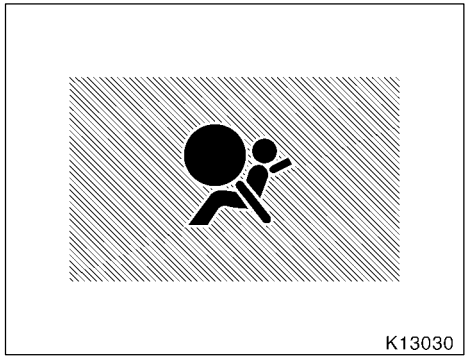


**This indicator comes on when the ignition key is turned to the ”ACC” or ”ON” position. It goes off after about 6 seconds. This means the front seat belt pretensioners are operating properly.**

This warning light system monitors the airbag sensor assembly, seat belt pretensioner assemblies, warning light, interconnecting wiring and power sources. (For details, see ”Service reminder indicators and warning buzzers” in Chapter 1-5.)

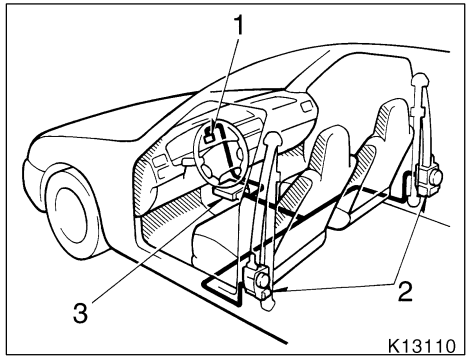


The seat belt pretensioner system mainly consists of the following components and their locations are shown in the illustration.

1. SRS airbag warning light
2. Seat belt pretensioner assemblies
3. Airbag sensor assembly

The seat belt pretensioner is controlled by the airbag sensor assembly. The airbag sensor assembly consists of a safing sensor and airbag sensor.

When a seat belt pretensioner is activated, an operating noise may be heard and a small amount of smoke-like gas may be released. This gas is harmless and does not indicate that a fire is occurring.

Once the seat belt pretensioner has been activated, the seat belt retractor remains locked.

**⚠ CAUTION**

**Do not modify, remove, strike or open the front seat belt pretensioner assemblies, airbag sensor or surrounding area or wiring. Doing any of these may cause sudden operation of the front seat belt pretensioners or disable the system, which could result in serious injury.**

**Failure to follow these instructions can result in serious injuries.**

***NOTICE***

***Do not perform any of the following changes without consulting your Toyota dealer. Such changes can interfere with proper operation of the seat belt pretensioners in some cases.***

- ***Installation of electronic items such as a mobile two-way radio, cassette tape player or compact disc player***
- ***Repairs on or near the front seat belt retractor assemblies***
- ***Modification of the suspension system***
- ***Modification of the front end structure***
- ***Attachment of a grille guard (bull bar, kangaroo bar, etc.), snowplow, winches or any other equipment to the front end***
- ***Repairs made on or near the front end structure or console***

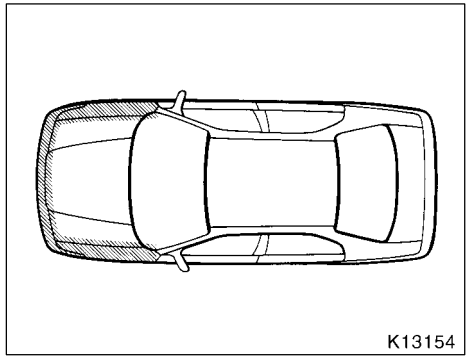


This front seat belt pretensioner system has a service reminder indicator to inform the driver of operating problems. If either of the following conditions occurs, this indicates a malfunction of the airbags or pretensioners. Contact your Toyota dealer as soon as possible to service the vehicle.

- The light does not come on when the ignition key is turned to the ”ACC” or ”ON” position, or remains on.
- The light comes on or flashes while driving.
- If either front seat belt does not retract or can not be pulled out due to a malfunction or activation of the pretensioner.
- The front seat belt pretensioner assembly or surrounding area has been damaged.
- The front and side parts of the vehicle (shaded in the illustration) were involved in an accident not of the extent to cause the seat belt pretensioners to operate.
- The front seat belt pretensioner assembly is scratched, cracked, or otherwise damaged.

## SRS driver and front passenger airbags

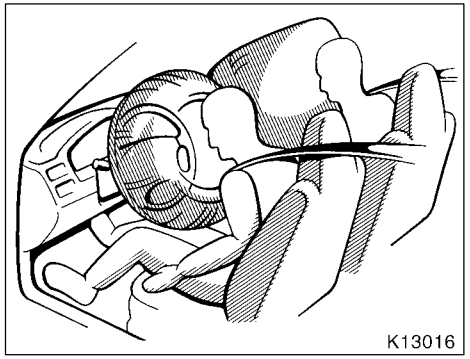


**The SRS (Supplemental Restraint System) airbags are designed to provide further protection for the driver and front passenger when added to the primary protection provided by the seat belts.**

In response to a severe frontal impact, the SRS airbags work together with the seat belts to help prevent or reduce injury by inflating, in order to decrease the likelihood of the driver’s or front passenger’s head or chest directly hitting the steering wheel or dashboard. The passenger airbag is activated even with no passenger in the front seat.

Be sure to wear your seat belt.

**⚠ CAUTION**

**A driver or front passenger too close to the steering wheel or dashboard during airbag deployment can be killed or seriously injured. Toyota strongly recommends that:**

- **The driver sit as far back as possible from the steering wheel while still maintaining control of the vehicle.**
- **The front passenger sit as far back as possible from the dashboard.**
- **All vehicle occupants be properly restrained using the available seat belts.**

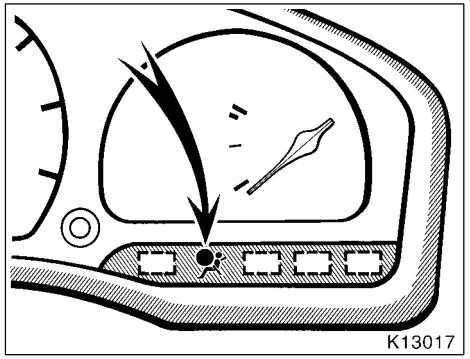


**This indicator comes on when the ignition key is turned to the ”ACC” or ”ON” position. It goes off after about 6 seconds. This means the SRS airbags are operating properly.**

This warning light system monitors the airbag sensor assembly, inflators, warning light, interconnecting wiring and power sources. (For details, see ”Service remainder indicators and warning buzzers” in Chapter 1-5.)

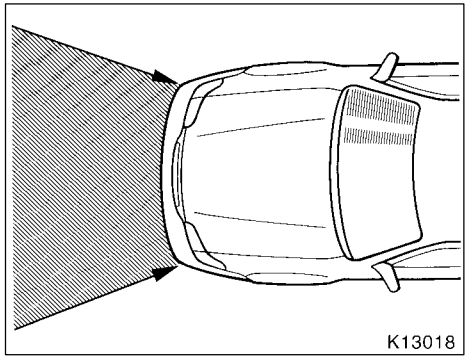


**The SRS airbag system is designed to activate in response to a severe frontal impact within the shaded area between the arrows in the illustration.**

There may be the case that the SRS airbags will not activate with such an impact in which the occupant wearing the seat belt correctly would not get serious injury.

The SRS airbags will deploy if the severity of the impact is above the designed threshold level, comparable to an approximate 20 km/h (14 mph) collision when impacting straight into a fixed barrier that does not move or deform.

If the severity of the impact is below the above threshold level, the SRS airbags may not deploy.

However, this threshold velocity will be considerably higher if the vehicle strikes an object, such as a parked vehicle or sign pole, which can move or deform on impact, or if it is involved in an underride collision (a collision in which the nose of the vehicle ”underrides”, or goes under, the bed of a truck, etc.).

It is possible with collision severity at the marginal level of airbag sensor detection and activation that only one of your vehicle’s two airbags will deploy.

For the safety of all occupants, be sure to always wear seat belts.

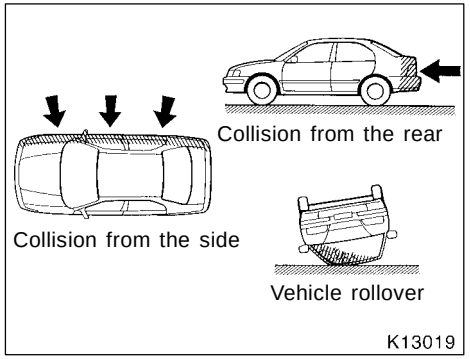


**The SRS airbags are not designed to inflate if the vehicle is subjected to a side or rear impact, if it rolls over, or if it is involved in a low-speed frontal collision.**

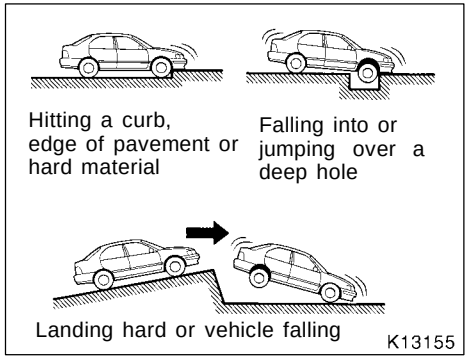


**The SRS airbags may deploy if a serious impact occurs to the underside of your vehicle. Some examples are shown in the illustration.**

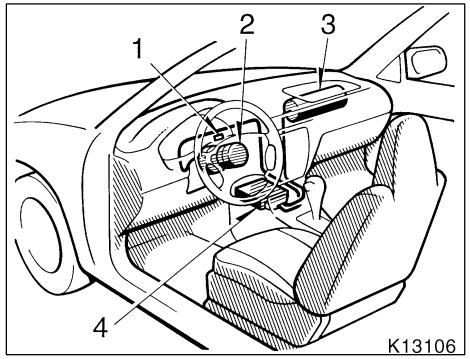


The SRS airbag system mainly consists of the following components and their locations are shown in the illustration.

1. SRS airbag warning light
2. Airbag module for driver (airbag and inflator)
3. Airbag module for passenger (airbag and inflator)
4. Airbag sensor assembly

The airbag sensor assembly consists of a safing sensor and airbag sensor.

In a severe frontal impact, sensors detect deceleration and the system triggers the airbag inflators. Then a chemical reaction in the inflators momentarily fills the airbags with non-toxic gas to help restrain the forward motion of the occupants.

When the airbags inflate, they produce a fairly loud noise and release some smoke and residue along with non-toxic gas. This does not indicate a fire. This gas is normally harmless, however, for those who have delicate skin, it may cause minor skin irritation. Be sure to wash off any residue as soon as possible to prevent minor skin irritation.

Deployment of the airbags happens in a fraction of a second, so the airbags must inflate with considerable force. While the system is designed to reduce serious injuries, it may also cause minor burns or abrasions and swellings.

Parts of the airbag module (steering wheel hub, dashboard) may be hot for several minutes, but the airbags themselves will not be hot. The airbags are designed to inflate only once.

A crash severe enough to inflate the airbags may break the windshield as the vehicle buckles. In vehicles with a passenger airbag the windshield may also be damaged by absorbing some of the force of the inflating airbag.

**⚠ CAUTION**

- **The SRS airbag system is designed only as a supplement to the primary protection of the driver side and front passenger side seat belt systems. The front seat occupants can be killed or seriously injured by an inflating airbag if they do not wear the available seat belts. During sudden braking just before a collision, an unrestrained driver or front passenger can move forward into direct contact with or close proximity to the airbag which may then deploy during the collision. To obtain maximum protection in an accident, the driver and all passengers in the vehicle must wear their seat belts. Wearing a seat belt during an accident reduces the chances of death or serious injuries or being thrown out of the vehicle. For instructions and precautions concerning the seat belt system, see ”Seat belts” in this chapter.**

- **Improperly seated and/or restrained infants and children can be killed or seriously injured by a deploying airbag. An infant or child who is too small to use a seat belt should be properly secured using a child restraint system. Toyota strongly recommends that all infants and children be placed in the rear seat of the vehicle and properly restrained. The rear seat is the safest for infants and children. For instructions concerning the installation of a child restraint system, see ”Child restraint” in this chapter.**

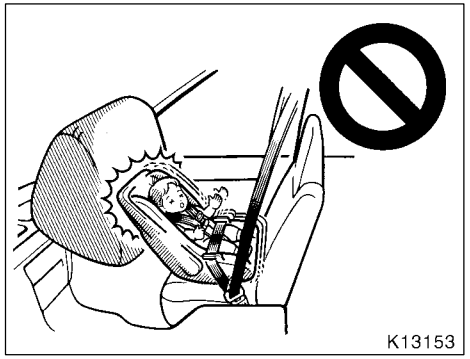


- **Never put a rear-facing child restraint system on the front seat because the force of the rapid inflation of the passenger airbag can cause death or serious injury to the child.**

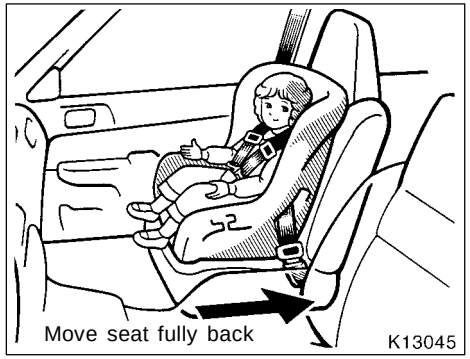


- **A forward- facing child restraint system should be allowed to put on the front seat only when it is unavoidable. Always move the seat as far back as possible, because the force of a deploying airbag could cause death or serious injury to the child.**

  **For instructions concerning the installation of a child restraint system, see ”Child restraint” in this chapter.**

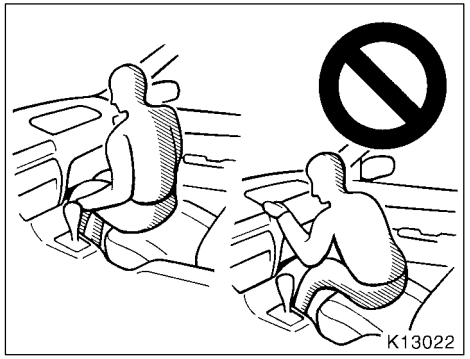


- **Do not sit on the edge of the seat or lean over the dashboard when the vehicle is in use. The airbags inflate with considerable speed and force; you may be killed or seriously injured. Sit up straight and well back in the seat, and always use your seat belt.**

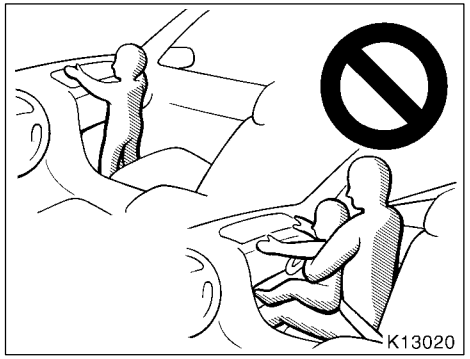


- **Do not allow a child to stand up, or to kneel on the front passenger seat. The airbag inflates with considerable speed and force; the child may be killed or seriously injured.**
- **Do not hold a child on your lap or in your arms. Use a child restraint system in the rear seat. For instructions concerning the installation of a child restraint system, see ”Child restraint” in this chapter.**

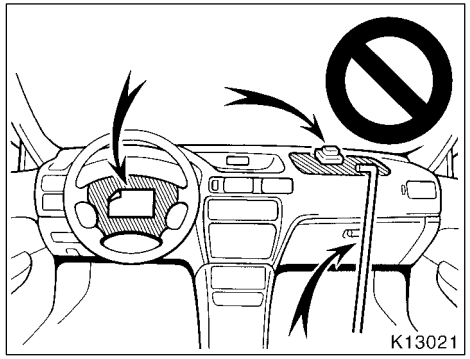


- **Do not put objects or your pets on or in front of the dashboard or steering wheel pad that houses the airbag system. They might restrict inflation or cause death or serious injury as they are projected rearward by the force of deploying airbags. Likewise, the driver and front passenger should not hold things in their arms or on their knees.**

- **Do not modify or remove any wiring. Do not modify, remove, strike or open any components such as the steering wheel pad, steering wheel, column cover, front passenger airbag cover, front passenger airbag or airbag sensor assembly. Doing any of these may cause sudden SRS airbag inflation or disable the system, which could result in death or serious injury.**

**Failure to follow these instructions can result in death or serious injuries.**

***NOTICE***

***Do not perform any of the following changes without consulting your Toyota dealer. Such changes can interfere with proper operation of the SRS airbag system in some cases.***

- ***Installation of electronic items such as a mobile two-way radio, cassette tape player or compact disc player***
- ***Modification of the suspension system***
- ***Modification of the front end structure***
- ***Attachment of a grille guard (bull bar, kangaroo bar, etc.), snowplow, winches or any other equipment to the front end***
- ***Repairs made on or near the front end structure, console, steering column, steering wheel or dashboard near the front passenger airbag***

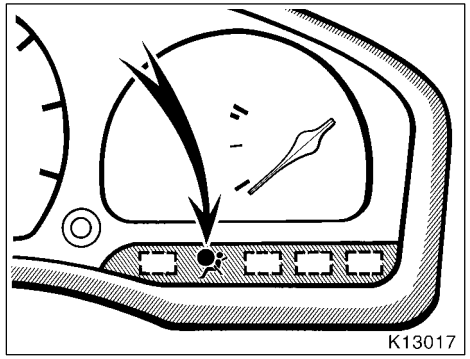


This SRS airbag system has a service reminder indicator to inform the driver of operating problems. If either of the following conditions occurs, this indicates a malfunction of the airbags. Contact your Toyota dealer as soon as possible to service the vehicle.

- The light does not come on when the ignition key is turned to the ”ACC” or ”ON” position, or remains on.
- The light comes on while driving.

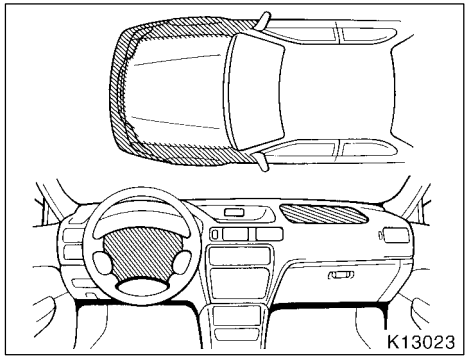


In the following cases, contact your Toyota dealer as soon as possible:

- The SRS airbags have been inflated.
- The front part of the vehicle (shaded in the illustration) was involved in an accident not of the extent to cause the SRS airbags to inflate.
- The pad section of the steering wheel or front passenger airbag cover (shaded in the illustration) is scratched, cracked, or otherwise damaged.

| ***NOTICE*** |
| --- |
| ***Do not disconnect the battery cables before contacting your Toyota dealer.*** |

## SRS driver airbag

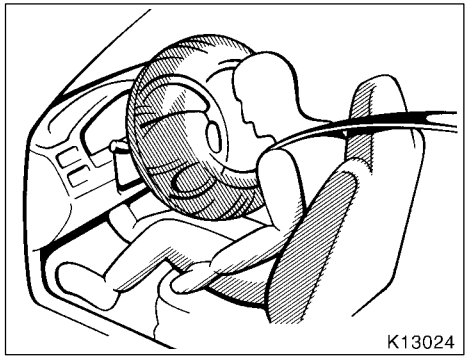


**The SRS (Supplemental Restraint System) airbag is designed to provide further protection for the driver when added to the primary protection provided by the seat belt.**

In response to a severe frontal impact, the SRS airbag works together with the seat belt to help prevent or reduce injury by inflating, in order to decrease the likelihood of the driver’s head or chest directly hitting the steering wheel.

Be sure to wear your seat belt.

**⚠ CAUTION**

**A driver too close to the steering wheel during airbag deployment can be killed or seriously injured. Toyota strongly recommends that:**

- **The driver sit as far back as possible from the steering wheel while still maintaining control of the vehicle.**
- **All vehicle occupants be properly restrained using the available seat belts.**

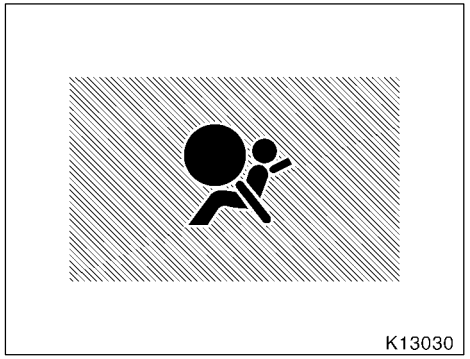


**This indicator comes on when the ignition key is turned to the ”ACC” or ”ON” position. It goes off after about 6 seconds. This means the SRS airbag is operating properly.**

This warning light system monitors the airbag sensor assembly, inflator, warning light, interconnecting wiring and power sources. (For details, see ”Service reminder indicators and warning buzzers” in Chapter 1-5.)

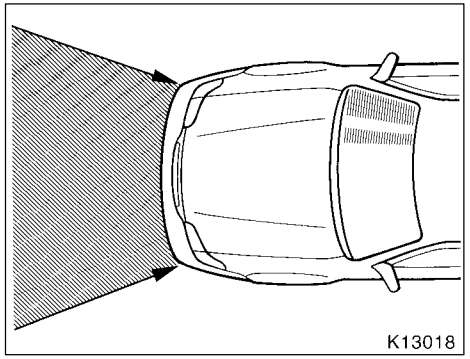


**The SRS airbag system is designed to activate in response to a severe frontal impact within the shaded area between the arrows in the illustration.**

There may be the case that the SRS airbag will not activate with such an impact in which the occupant wearing the seat belt correctly would not get serious injury.

The SRS airbag will deploy if the severity of the impact is above the designed threshold level, comparable to an approximate 20 km/h (14 mph) collision when impacting straight into a fixed barrier that does not move or deform.

If the severity of the impact is below the above threshold level, the SRS airbag may not deploy.

However, this threshold velocity will be considerably higher if the vehicle strikes an object, such as a parked vehicle or sign pole, which can move or deform on impact, or if it is involved in an underride collision (e.g. a collision in which the nose of the vehicle ”underrides”, or goes under, the bed of a truck, etc.).

For the safety of all occupants, be sure to always wear seat belts.

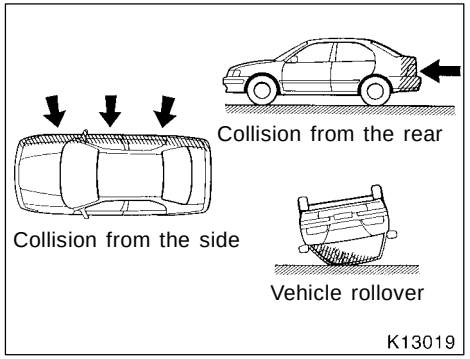


**The SRS airbag is not designed to inflate if the vehicle is subjected to a side or rear impact, if it rolls over, or if it is involved in a low-speed frontal collision.**

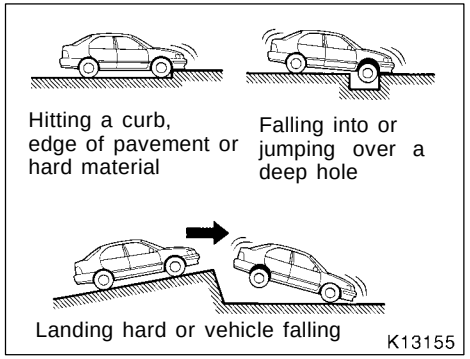


**The SRS airbag may deploy if a serious impact occurs to the underside of your vehicle. Some examples are shown in the illustration.**

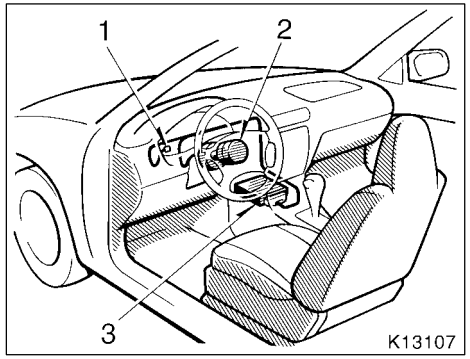


The SRS airbag system mainly consists of the following components and their locations are shown in the illustration.

1. SRS airbag warning light
2. Airbag module for driver (airbag and inflator)
3. Airbag sensor assembly

The airbag sensor assembly consists of a safing sensor and airbag sensor.

In a severe frontal impact, the sensor detects deceleration and the system triggers the airbag inflator. Then a chemical reaction in the inflator momentarily fills the airbag with non-toxic gas to help restrain the forward motion of the driver.

When the airbag inflates, it produces a fairly loud noise and releases some smoke and residue along with non-toxic gas. This does not indicate a fire. This gas is normally harmless, however, for those who have delicate skin, it may cause minor skin irritation. Be sure to wash off any residue as soon as possible to prevent minor skin irritation.

Deployment of the airbag happens in a fraction of a second, so the airbag must inflate with considerable force. While the system is designed to reduce serious injuries, it may also cause minor burns or abrasions and swellings.

The steering wheel hub may be hot for several minutes, but the airbag itself will not be hot. The airbag is designed to inflate only once.

**⚠ CAUTION**

**The SRS airbag system is designed only as a supplement to the primary protection of the driver side seat belt system. The driver can be killed or seriously injured by an inflating airbag if they do not wear the available seat belts. During sudden braking just before a collision, an unrestrained driver can move forward into direct contact with or close proximity to the airbag which may then deploy during the collision. To obtain maximum protection in an accident, the driver and all passengers in the vehicle must wear their seat belts. Wearing a seat belt during an accident reduces the chances of death or serious injuries or being thrown out of the vehicle. For instructions and precautions concerning the seat belt system, see ”Seat belts” in this chapter.**

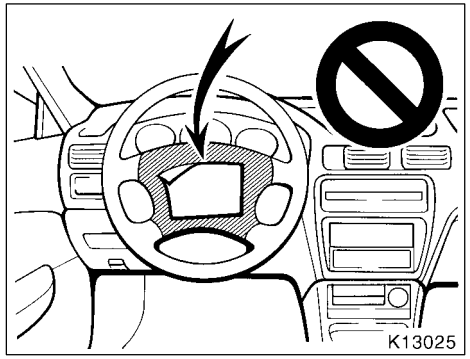


**⚠ CAUTION**

- **Do not put objects or your pets on or in front of the steering wheel pad. They might restrict inflation or cause death or serious injury as they are projected rearward by the force of a deploying airbag. Likewise, the driver should not hold things in his/her arms or on his/her knees.**

- **Do not modify or remove any wiring. Do not modify, remove, strike or open any components such as the steering wheel pad, steering wheel, column cover or airbag sensor assembly. Doing any of these may cause sudden SRS airbag inflation or disable the system, which could result in death or serious injury.**

**Failure to follow these instructions can result in death or serious injuries.**

***NOTICE***

***Do not perform any of the following changes without consulting your Toyota dealer. Such changes can interfere with proper operation of the SRS airbag system in some cases.***

- ***Installation of electronic items such as a mobile two-way radio, cassette tape player or compact disc player***
- ***Modification of the suspension system***
- ***Modification of the front end structure***
- ***Attachment of a grille guard (bull bar, kangaroo bar, etc.), snowplow, winches or any other equipment to the front end***
- ***Repairs made on or near the front end structure, console, steering column, steering wheel***

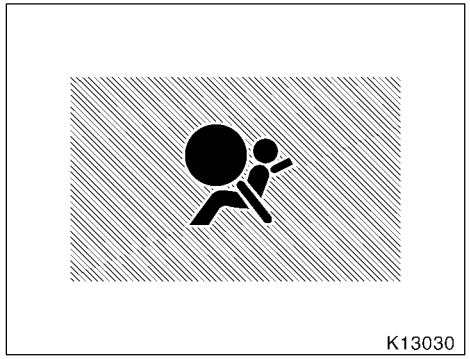


This SRS airbag system has a service reminder indicator to inform the driver of operating problems. If either of the following conditions occurs, this indicates a malfunction of the airbag. Contact your Toyota dealer as soon as possible to service the vehicle.

- The light does not come on when the ignition key is turned to the ”ACC” or ”ON” position, or remains on.
- The light comes on while driving.

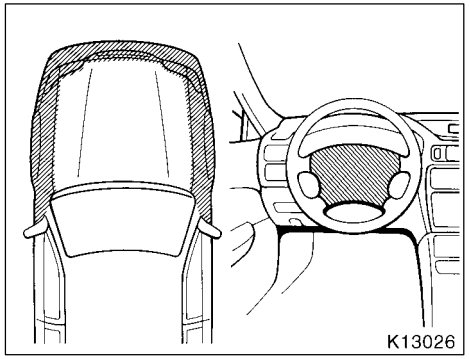


In the following cases, contact your Toyota dealer as soon as possible:

- The SRS airbag has been inflated.
- The front part of the vehicle (shaded in the illustration) was involved in an accident not of the extent to cause the SRS airbag to inflate.
- The pad section of the steering wheel (shaded in the illustration) is scratched, cracked, or otherwise damaged.

***NOTICE***

***Do not disconnect the battery cables before contacting your Toyota dealer.***

## Child restraint— —Child restraint precautions

**Toyota strongly urges the use of child restraint systems for children small enough to use them.**

The laws of all fifty states in the U.S.A. and Canada now require the use of a child restraint system.

Your vehicle conforms to SAE J1819.

If a child is too large for a child restraint system, the child should sit in the rear seat and must be restrained using the vehicle’s seat belt. See ”Seat belts” for details.

**⚠ CAUTION**

- **For effective protection in automobile accidents and sudden stops, children must be properly restrained using a seat belt or child restraint system depending on the age and size of the child. Holding a child in your arms is not a substitute for a child restraint system. In an accident, the child can be crushed against the windshield, or between you and the vehicle’s interior.**

- **Toyota strongly urges use of a proper child restraint system which conforms to the size of the child and is put on the rear seat. According to accident statistics, the child is safer when properly restrained in the rear seat than in the front seat.**
- **Vehicles with a passenger airbag:**

  **Never put a rear-facing child restraint system on the front seat. In the event of an accident, the force of the rapid inflation of the airbag can cause death or serious injury if a rear-facing child restraint system is put on the front seat.**

  **Unless it is unavoidable, do not put a forward-facing child restraint system on the front seat.**

  **A forward-facing child restraint system should be allowed to put on the front seat only when it is unavoidable. Always move the seat as far back as possible, because the force of a deploying airbag could cause death or serious injury to the child.**
- **Make sure that you have complied with all installation instructions provided by the child restraint manufacturer and that the system is properly secured.**

## —Child restraint system

**A child restraint system for a small child or baby must itself be properly restrained on the seat with either the lap belt or the lap portion of the lap/shoulder belt. You must carefully consult the manufacturer’s instructions which accompany your child restraint system.**

To provide proper restraint, use a child restraint system following the manufacturer’s instructions about the appropriate age and size of the child for the child restraint system.

Install the child restraint system correctly following the instructions provided by its manufacturer of the system. General directions are also provided under the following illustrations.

The child restraint system should be installed on the rear seat. According to accident statistics, the child is safer when properly restrained in the rear seat than in the front seat.

**⚠ CAUTION**

- **Vehicles with a passenger airbag:**

  **Never put a rear-facing child restraint system on the front seat. In the event of an accident, the force of the rapid inflation of the airbag can cause death or serious injury if a rear-facing child restraint system is put on the front seat.**

  **Unless it is unavoidable, do not put a forward-facing child restraint system on the front seat.**

  **A forward-facing child restraint system should be allowed to put on the front seat only when it is unavoidable. Always move the seat as far back as possible, because the force of a deploying airbag could cause death or serious injury to the child.**

- **After installing the child restraint system, make sure it is secured in place following the manufacturer’s instructions. If it is not restrained securely, it may cause death or serious injury to the child in the event of a sudden stop or accident.**

When not using the child restraint system, keep it secured with the seat belt or place it in the trunk or somewhere other than the passenger compartment. This will prevent it from injuring passengers in the event of a sudden stop or accident.

Your vehicle has anchors for securing the top strap of a child restraint system. The anchor nuts are welded beneath the sheet metal to permit installation of an anchor bracket for a child restraint system.

To install an anchor bracket, use an 8 mm × 30 mm × 1.25 mm coarse thread metric bolt and a 10 mm (0.4 in.) spacer. Note that the bolts accompanying many child restraint systems are not metric. You can damage the anchor nuts on your vehicle if you force bolts with different thread into the anchor nuts.

For instructions about how to install the anchor bracket, see ”—Top strap anchors and locations”.

If your child restraint system does not provide any of the necessary parts, you can purchase the following items from your Toyota dealer.

- CRS installation kit (Part No.04731-22012)—contains 1 bolt, 3 types of spacers and 1 locking clip.
- Bolt (Part No.91511-60830)

## —Types of child restraint system

Child restraint systems are classified into the following 3 types depending on the child’s age and size.

(A) Infant seat

(B) Convertible seat

(C) Booster seat

Install the child restraint system following the instructions provided by its manufacturer.

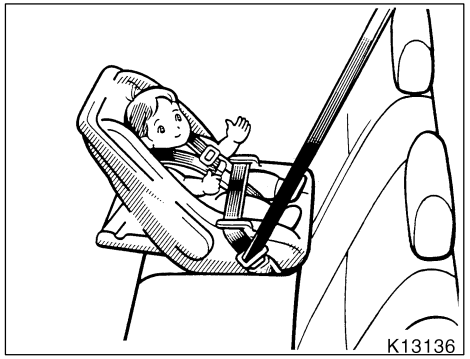


**(A) Infant seat**

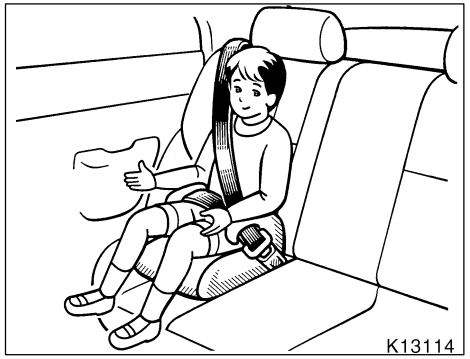


**(C) Booster seat**

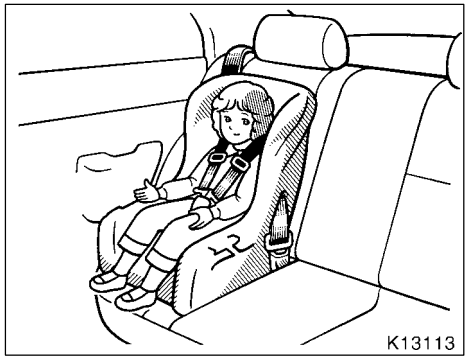


**(B) Convertible seat**

## —Installation with 2-point type seat belt

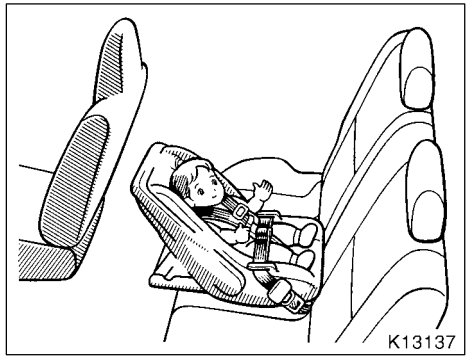


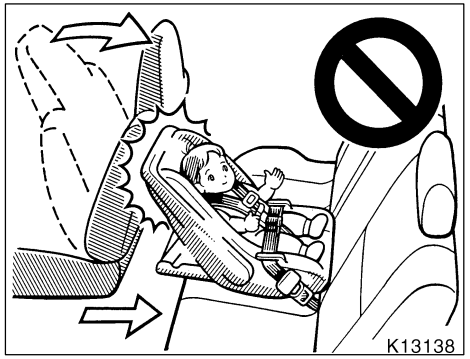


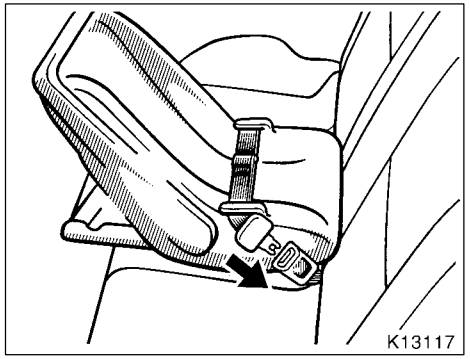


**(A) INFANT SEAT INSTALLATION**

**An infant seat is used in rear-facing position only.**

**⚠ CAUTION**

**Do not put a rear-facing child restraint system on the rear seat if it interferes with the lock mechanism of the front seats. This can cause severe injury to the child and front passenger in case of sudden braking or a collision.**

1. Run the center lap belt through or around the infant seat following the instructions provided by its manufacturer and insert the tab into the buckle taking care not to twist the lap belt.

**⚠ CAUTION**

- **After inserting the tab, make sure the tab and buckle are locked and that the lap belt is not twisted.**
- **Do not insert coins, clips, etc. in the buckle as this may prevent you from properly latching the tab and buckle.**
- **If the seat belt does not function normally, it cannot protect your child from injury. Contact your Toyota dealer immediately. Do not use the seat until the seat belt is fixed.**

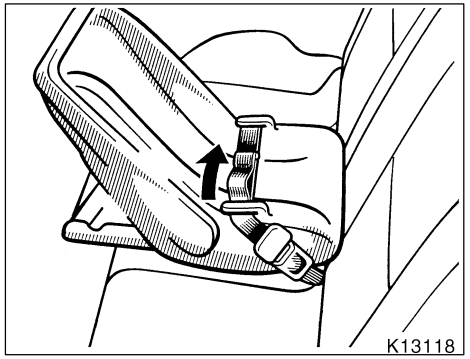


2. While pressing the infant seat firmly against the seat cushion and seatback, tighten the lap belt by pulling its free end to hold the infant seat securely.

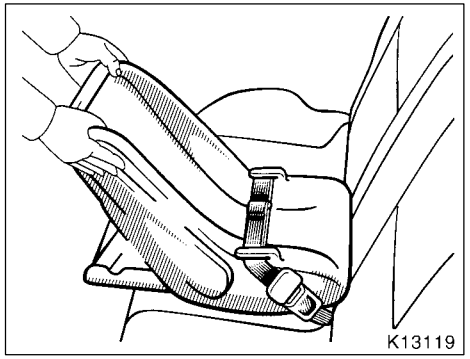


**⚠ CAUTION**

**Push and pull the child restraint system in different directions to be sure it is secure. Follow all the installation instructions provided by its manufacturer.**

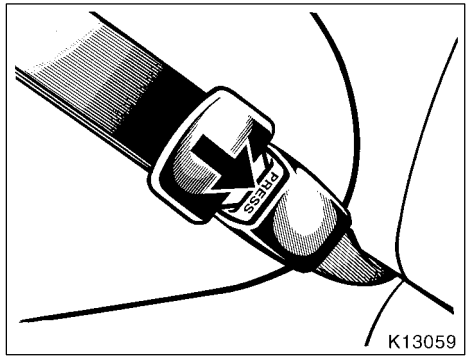


3. To remove the infant seat, press the buckle- release button.

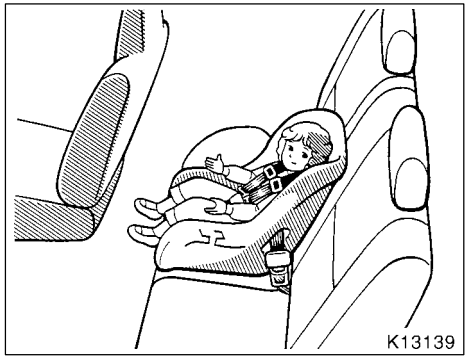


**(B) CONVERTIBLE SEAT INSTALLATION**

**A convertible seat is used in forward-facing and rear- facing position depending on the child’s age and size. When installing, follow the manufacturer’s instructions about the applicable child’s age and size as well as directions for installing a child restraint system.**

**⚠ CAUTION**

**Do not put a rear- facing child restraint system on the rear seat if it interferes with the lock mechanism of the front seats. This can cause severe injury to the child and front passenger in case of sudden braking or a collision.**

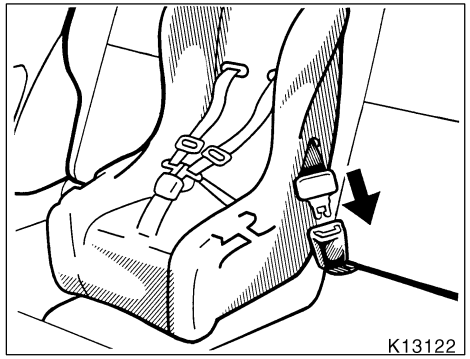


1. Run the center lap belt through or around the convertible seat following the instructions provided by its manufacturer and insert the tab into the buckle taking care not to twist the lap belt.

**⚠ CAUTION**

- **After inserting the tab, make sure the tab and buckle are locked and that the lap belt is not twisted.**
- **Do not insert coins, clips, etc. in the buckle as this may prevent you from properly latching the tab and buckle.**
- **If the seat belt does not function normally, it cannot protect your child from injury. Contact your Toyota dealer immediately. Do not use the seat until the seat belt is fixed.**

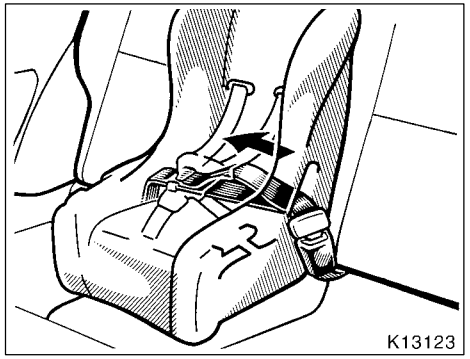


2. While pressing the convertible seat firmly against the seat cushion and seatback, tighten the lap belt by pulling its free end to hold the convertible seat securely.

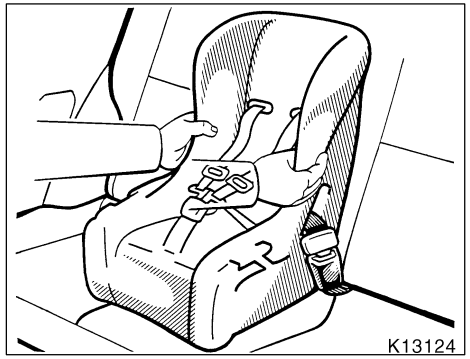


**⚠ CAUTION**

**Push and pull the child restraint system in different directions to be sure it is secure. Follow all the installation instructions provided by its manufacturer.**

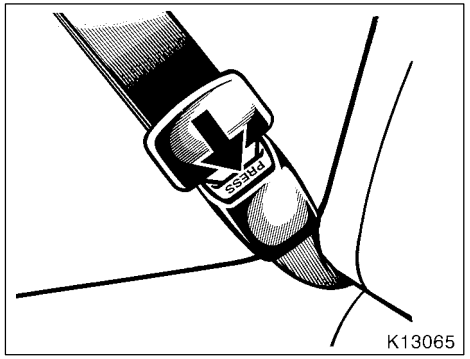


3. To remove the convertible seat, press the buckle-release button.

**—Installation with 3-point type seat belt**

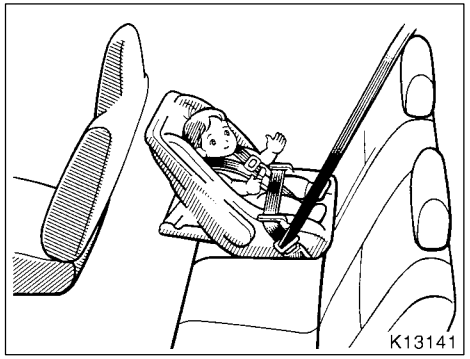


**(A) INFANT SEAT INSTALLATION**

**An infant seat is used in rear-facing position only.**

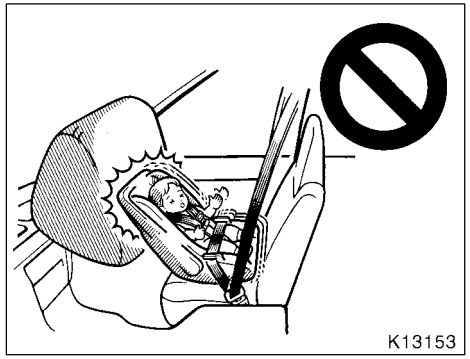


**⚠ CAUTION**

- **Vehicles with a passenger airbag:**

  **Never put a rear-facing child restraint system on the front seat because the force of the rapid inflation of the passenger airbag can cause death or serious injury to the child.**

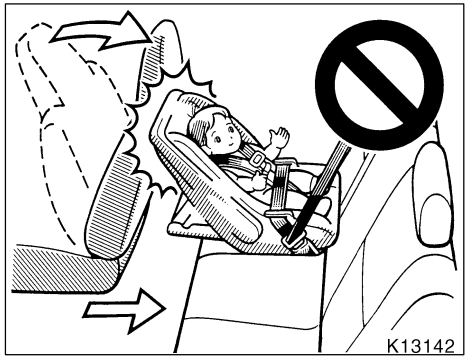


- **Do not put a rear-facing child restraint system on the rear seat if it interferes with the lock mechanism of the front seats. This can cause severe injury to the child and front passenger in case of sudden braking or a collision.**

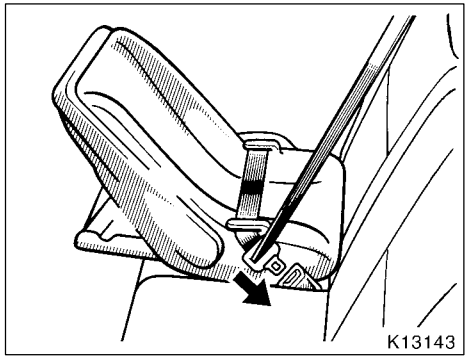


1. Run the lap and shoulder belt through or around the infant seat following the instructions provided by its manufacturer and insert the tab into the buckle taking care not to twist the belt. Keep the lap portion of the belt tight.

**⚠ CAUTION**

- **After inserting the tab, make sure the tab and buckle are locked and that the lap and shoulder portions of the belt are not twisted.**
- **Do not insert coins, clips, etc. in the buckle as this may prevent you from properly latching the tab and buckle.**
- **If the seat belt does not function normally, it cannot protect your child from injury. Contact your Toyota dealer immediately. Do not use the seat until the seat belt is fixed.**

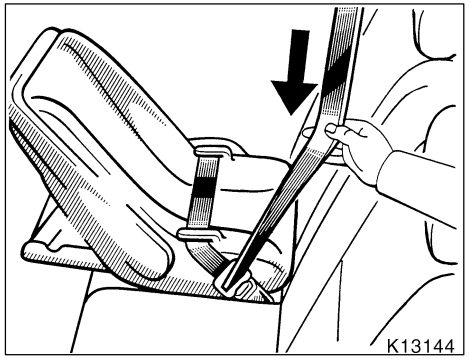


2. Fully extend the shoulder belt to put it in the lock mode. When the belt is then retracted even slightly, it cannot be extended.

To hold the infant seat securely, make sure the belt is in the lock mode before letting the belt retract.

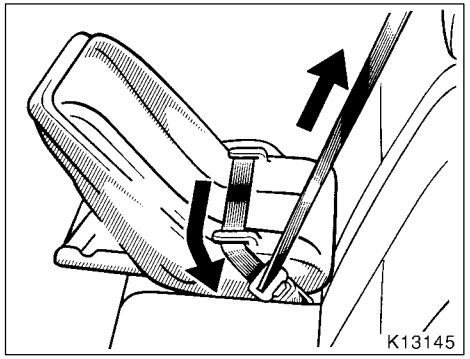


3. While pressing the infant seat firmly against the seat cushion and seatback, let the shoulder belt retract as far as it will go to hold the infant seat securely.

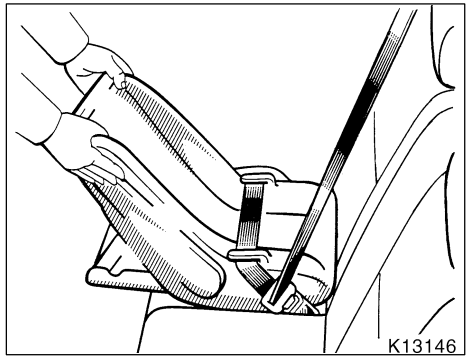


**⚠ CAUTION**

**Push and pull the child restraint system in different directions to be sure it is secure. Follow all the installation instructions provided by its manufacturer.**

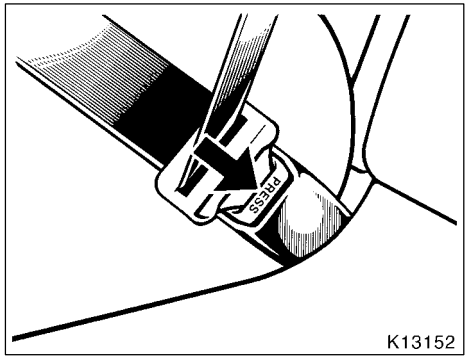


4. To remove the infant seat, press the buckle-release button and allow the belt to retract completely. The belt will move freely again and be ready to work for an adult or older child passenger.

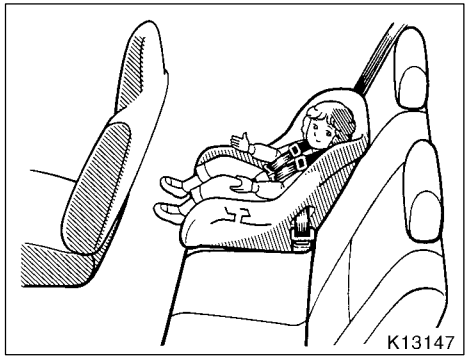


**(B) CONVERTIBLE SEAT INSTALLATION**

**A convertible seat is used in forward-facing and rear-facing position depending on the child’s age and size. When installing, follow the manufacturer’s instructions about the applicable child’s age and size as well as directions for installing a child restraint system.**

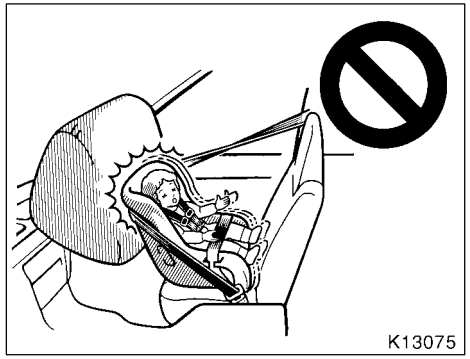


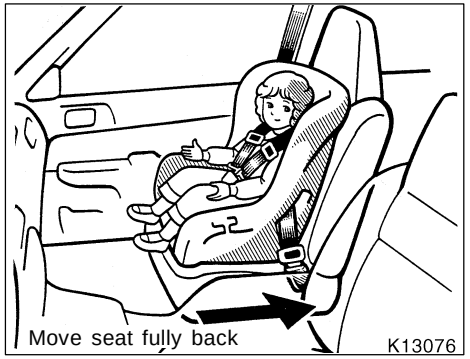


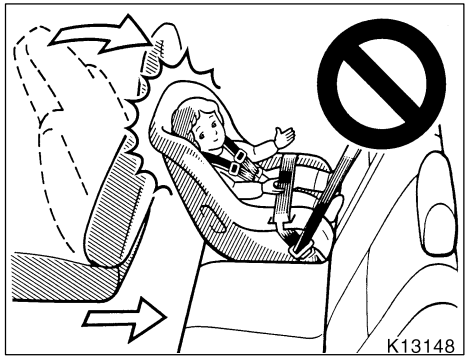


**⚠ CAUTION**

- **Vehicles with a passenger airbag:**

  **Never put a rear-facing child restraint system on the front seat because the force of the rapid inflation of the passenger airbag can cause death or serious injury to the child.**

**A forward-facing child restraint system should be allowed to put on the front seat only when it is unavoidable. Always move the seat as far back as possible, because the force of a deploying airbag could cause death or serious injury to the child.**

- **Do not put a rear-facing child restraint system on the rear seat if it interferes with the lock mechanism of the front seats. This can cause severe injury to the child and front passenger in case of sudden braking or a collision.**

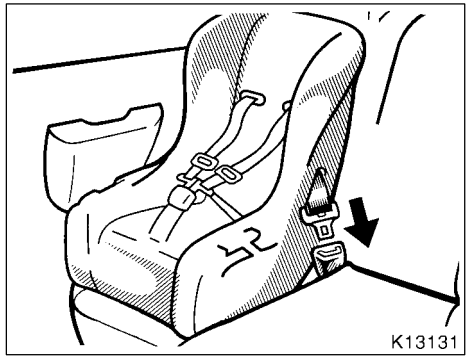


1. Run the lap and shoulder belt through or around the convertible seat following the instructions provided by its manufacturer and insert the tab into the buckle taking care not to twist the belt. Keep the lap portion of the belt tight.

**⚠ CAUTION**

- **After inserting the tab, make sure the tab and buckle are locked and that the lap and shoulder portions of the belt are not twisted.**
- **Do not insert coins, clips, etc. in the buckle as this may prevent you from properly latching the tab and buckle.**
- **If the seat belt does not function normally, it cannot protect your child from injury. Contact your Toyota dealer immediately. Do not use the seat until the seat belt is fixed.**

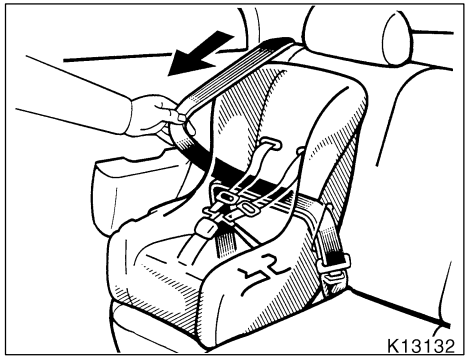


2. Fully extend the shoulder belt to put it in the lock mode. When the belt is then retracted slightly, it cannot be extended.

To hold the convertible seat securely, make sure the belt is in the lock mode before letting the belt retract.

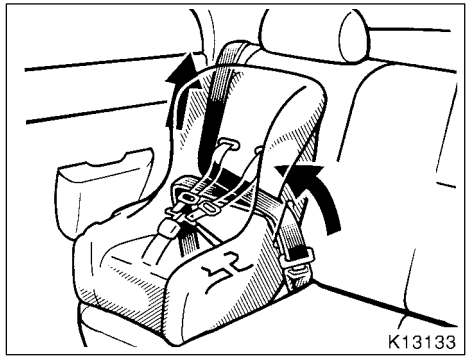


3. While pressing the convertible seat firmly against the seat cushion and seatback, let the shoulder belt retract as far as it will go to hold the convertible seat securely.

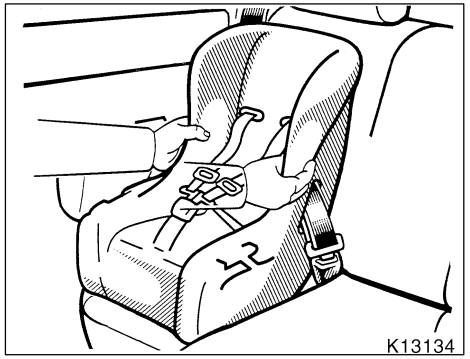


**⚠ CAUTION**

**Push and pull the child restraint system in different directions to be sure it is secure. Follow all the installation instructions provided by its manufacturer.**

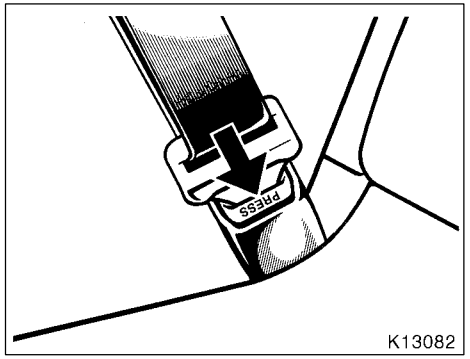


4. To remove the convertible seat, press the buckle-release button and allow the belt to retract completely. The belt will move freely again and be ready to work for an adult or older child passenger.

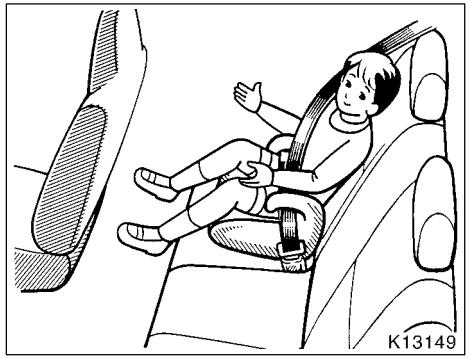


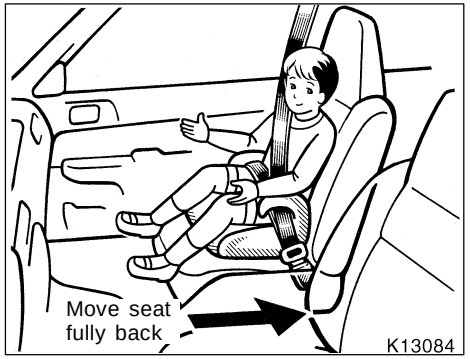


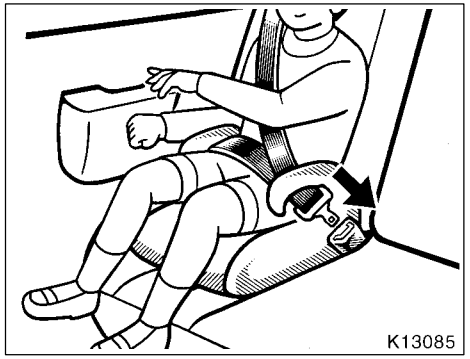


**(C) BOOSTER SEAT INSTALLATION**

**A booster seat is used in forward-facing position only.**

**⚠ CAUTION**

**Vehicles with a passenger airbag:**

**A forward-facing child restraint system should be allowed to put on the front seat only when it is unavoidable. Always move the seat as far back as possible, because the force of a deploying airbag could cause death or serious injury to the child.**

1. Sit the child on a booster seat. Run the lap and shoulder belt through or around the booster seat and child following the instructions provided by its manufacturer and insert the tab into the buckle taking care not to twist the belt.

Make sure the shoulder belt is correctly across the child’s shoulder and that the lap belt is positioned as low as possible on child’s hips. See ”Seat belts” for details.

**⚠ CAUTION**

- **Always make sure the shoulder belt is positioned across the center of child’s shoulder. The belt should be kept away from child’s neck, but not falling off child’s shoulder. Failure to do so could reduce the amount of protection in an accident and cause serious injuries in a collision.**
- **High-positioned lap belts and loose-fitting belts both could cause serious injuries due to sliding under the lap belt during a collision or other unintended result. Keep the lap belt positioned as low on hips as possible.**
- **For child’s safety, do not place the shoulder belt under child’s arm.**
- **After inserting the tab, make sure the tab and buckle are locked and that the lap and shoulder portions of the belt are not twisted.**
- **Do not insert coins, clips, etc. in the buckle as this may prevent you from properly latching the tab and buckle.**

- **If the seat belt does not function normally, it cannot protect your child from injury. Contact your Toyota dealer immediately. Do not use the seat until the seat belt is fixed.**

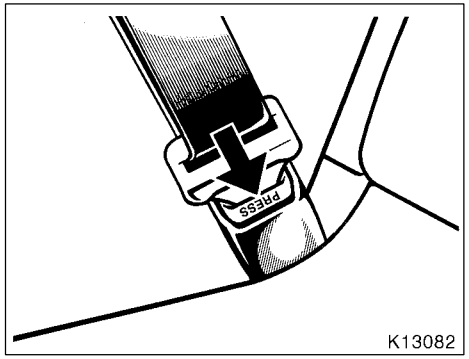


2. To remove the child restraint system, press the buckle-release button and allow the belt to retract.

## —Top strap anchors and locations

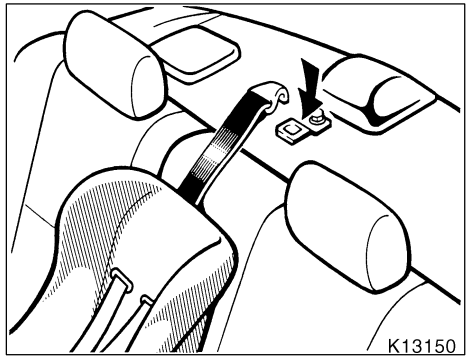


**If your child restraint system requires the use of a top strap, latch the hook onto the anchor bracket and tighten the top strap.**

See the following instructions to install the anchor bracket.

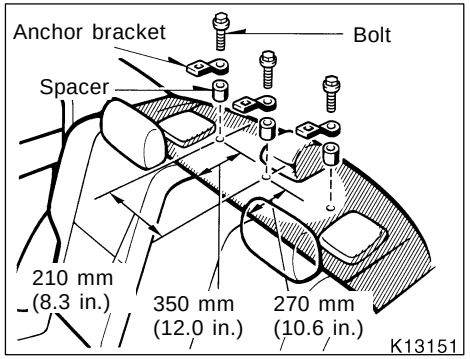


**On the filler panel behind the rear seat**

a. Using the illustration as a guide, run your fingers across the trim of the filler panel itself to locate the position of the holes underneath.

b. Make a hole in the covering directly above the hole in the filler panel.

c. Insert a 10 mm (0.4 in.) spacer and tighten down the anchor bracket for your child restraint system with a bolt. Torque the bolt to 16.5—24.7 N·m (1.68—2.52 kgf·m, 12.2- 18.2 ft·lb.).

To comply with Canadian Motor Vehicle Safety Standards, this model sold in Canada is provided with a bracket set in the glove box, designed for use with any of the 3 anchor locations shown in the illustration.

If your child restraint system does not provide any of the necessary parts, ask your Toyota dealer. (See ”—Child restraint system”.)

## Outside rear view mirrors—

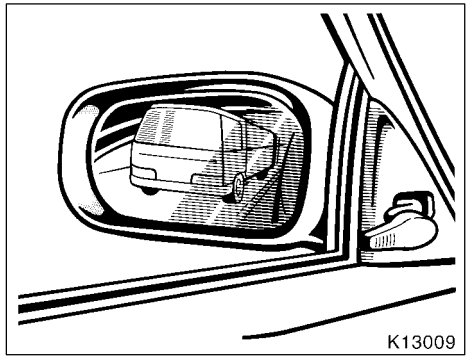


**Adjust the mirror so that you can just see the side of your vehicle in the mirror.**

Be careful when judging the size or distance of any object seen in the outside rear view mirror on the passenger’s side. It is a convex mirror with a curved surface. Any object seen in a convex mirror will look smaller and farther away than when seen in a flat mirror.

**⚠ CAUTION**

**Do not adjust the mirror while the vehicle is moving. It may cause the driver to mishandle the vehicle and an accident may occur resulting in personal injuries**

## —Rear view mirror remote control

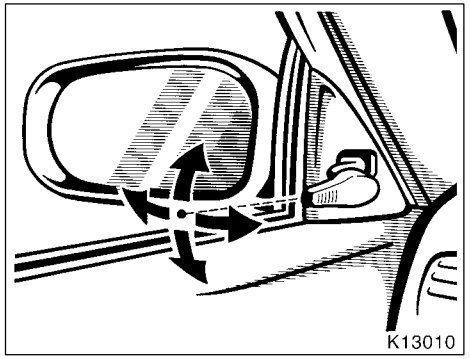


**To adjust the rear view mirror, simply operate the control lever.**

***NOTICE***

***If ice should jam the mirror, do not operate the control or scrape the mirror face. Use a spray de-icer to free the mirror.***

## Anti-glare inside rear view mirror

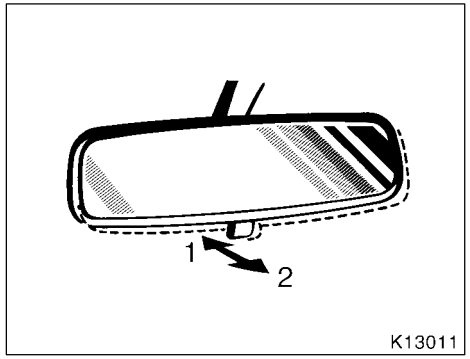


**Adjust the mirror so that you can just see the rear of your vehicle in the mirror.**

**To reduce glare from the headlights of the vehicle behind you during night driving, operate the lever on the lower edge of the mirror.**

Daylight driving—Lever at position 1

The reflection in the mirror has greater clarity at this position.

Night driving—Lever at position 2

Remember that by reducing glare you also lose some rear view clarity.

**⚠ CAUTION**

**Do not adjust the mirror while the vehicle is moving. It may cause the driver to mishandle the vehicle and an accident may occur resulting in personal injuries**

# Part 1
# OPERATION OF INSTRUMENTS AND CONTROLS—

## Chapter 1- 4
## Lights, Wipers and Defogger


- Headlights and turn signals
- Emergency flashers
- Instrument panel light control
- Interior light
- Windshield wipers and washer
- Rear window defogger


### Headlights and turn signals

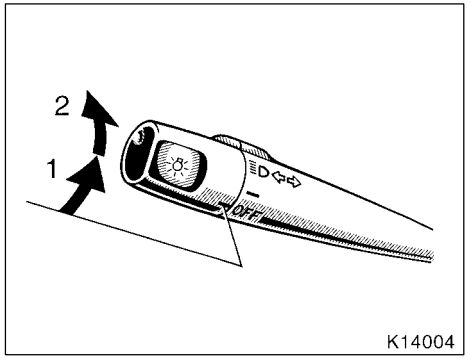


**HEADLIGHTS**

**To turn on the following lights: Twist the headlight/turn signal lever knob.**

Position 1—Parking, tail, license plate, side marker and instrument panel lights

Position 2—Headlights and all of the above

If you remove the key with the headlights left on, a buzzer reminds you to turn the lights off when you open the driver’s door.

***NOTICE***

***To prevent the battery from being discharged, do not leave the lights on for a long period when the engine is not running.***

**Daytime running light system (Canada only)**

The headlights turn on at reduced intensity when the parking brake is released with the engine started, even with the light switch in the ”OFF” position. They will not go off until the ignition switch is turned off.

To turn on the other exterior lights and instrument panel lights, twist the knob to the position 1.

Twist the knob to the position 2 to turn the headlights to full intensity for driving at night.

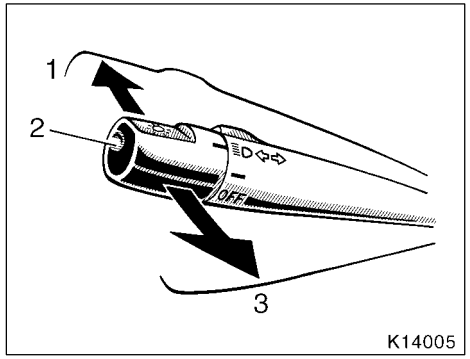


**High- Low beams—**For high beams, turn the headlights on and push the lever away from you (position 1). Pull the lever toward you (position 2) for low beams.

The headlight high beam indicator light (blue light) on the instrument panel will tell you that the high beams are on.

**Flashing the high beam headlights** (position 3)—Pull the lever all the way back. The high beam headlights turn off when you release the lever.

You can flash the high beam headlights with the knob turned to ”OFF”.

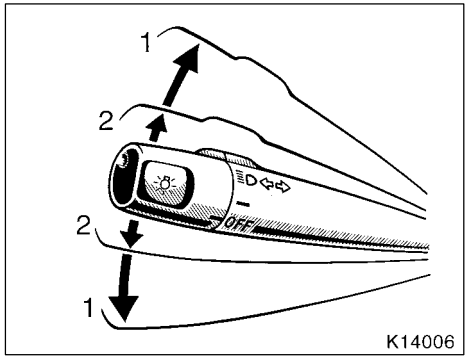


**TURN SIGNALS**

**To signal a turn, push the headlight/ turn signal lever up or down to position 1.**

The key must be in the ”ON” position.

The lever automatically returns after you make a turn, but you may have to return it by hand after you change lanes.

To signal a lane change, move the lever up or down to the pressure point (position 2) and hold it.

If the turn signal indicator lights (green lights) on the instrument panel flash faster than normal, a front or rear turn signal bulb is burned out.

## Emergency flashers

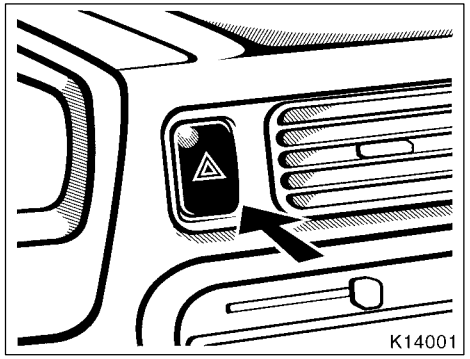


**To turn on the emergency flashers, push the switch.**

All the turn signal lights will flash. To turn them off, push the switch once again.

Turn on the emergency flashers to warn other drivers if your vehicle must be stopped where it might be a traffic hazard.

Always pull as far off the road as possible.

The turn signal light switch will not work when the emergency flashers are operating.

**NOTICE**

***To prevent the battery from being discharged, do not leave the switch on longer than necessary when the engine is not running.***

## Instrument panel light control

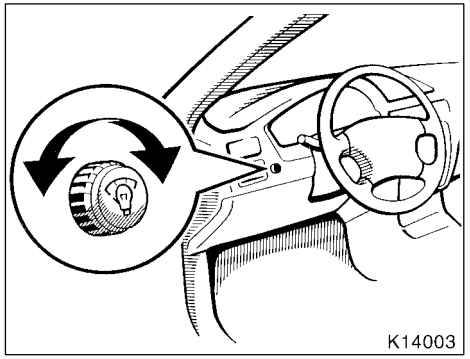


**To adjust the brightness of the instrument panel lights, turn the knob.**

## Interior light

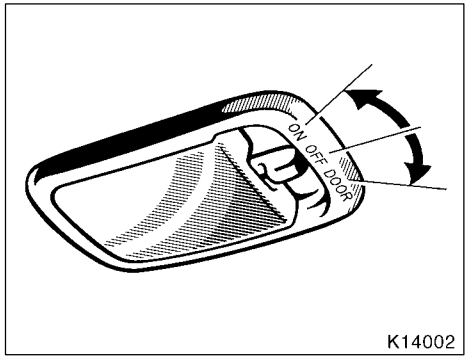


**To turn on the interior light, slide the switch.**

The interior light switch has the following positions:

”ON”—Keeps the light on all the time.

”OFF”—Turns the light off.

”DOOR”—Turns the light on when any of the door is opened. The light goes off when all of the doors are closed.

## Windshield wipers and washer

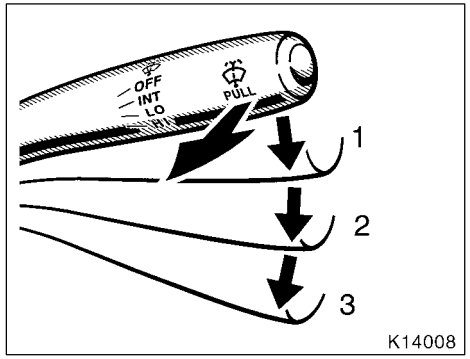


**Type A**

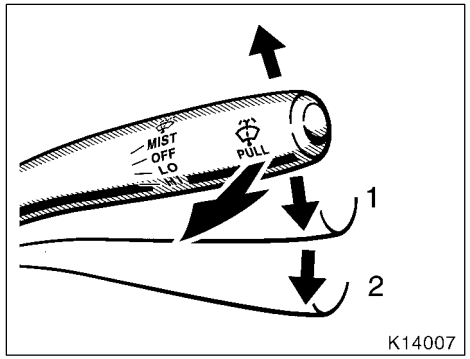


**Type B**

**To turn on the windshield wipers, move the lever to the desired setting.**

The key must be in the ”ON” position.

Type A—

| Lever position | Speed setting |
|---|---|
| Position 1 | Intermittent |
| Position 2 | Slow |
| Position 3 | Fast |

Type B—

| Lever position | Speed setting |
|---|---|
| Position 1 | Slow |
| Position 2 | Fast |

For a single sweep of the windshield, push the lever up and release it.

**To squirt washer fluid, pull the lever toward you and release it.**

Type A only—

If the windshield wipers are off, they will operate a couple of times after the washer squirts.

For instructions on adding washer fluid, see ”Adding washer fluid” in Chapter 7-3.

In freezing weather, warm the windshield with the defroster before using the washer. This will help prevent the washer fluid from freezing on your windshield, which can block your vision.

| ***NOTICE*** |
|---|
| ***Do not operate the wipers if the windshield is dry. It may scratch the glass.*** |

## Rear window defogger

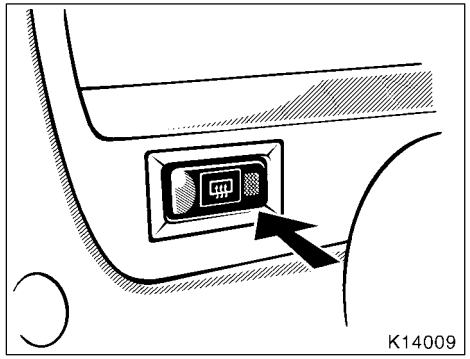


**To defog or defrost the rear window, push the switch.**

The key must be in the ”ON” position.

The thin heater wires on the inside of the rear window will quickly clear the surface. An indicator light will illuminate to indicate the defogger is operating.

Push the switch once again to turn the defogger off.

With timer: The system will automatically shut off after the defogger has operated about 15 minutes.

Make sure you turn the defogger off when the window is clear. Leaving the defogger on for a long time could cause the battery to discharge, especially during stop-and-go driving. The defogger is not designed for drying rain water or for melting snow.

***NOTICE***

- ***Without timer: To prevent the battery from discharged, turn the switch on when the engine is running.***
- ***When cleaning the inside of the rear window, be careful not to scratch or damage the heater wires.***

# Part 1
# OPERATION OF INSTRUMENTS AND CONTROLS—

## Chapter 1-5
## Gauges, Meters and Service reminder indicators

- Fuel gauge
- Engine coolant temperature gauge
- Tachometer
- Odometer and trip meter
- Service reminder indicators and warning buzzers

### Fuel gauge

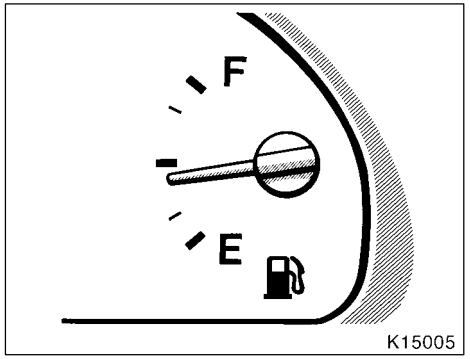


**With tachometer**

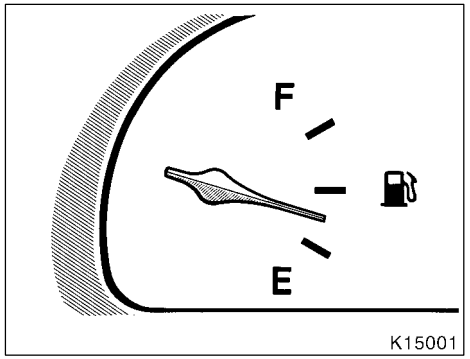


**Without tachometer**

**The gauge works when the ignition switch is on and indicates the approximate quantity of fuel remaining in the tank.**

Nearly full—Needle at ”F”
Nearly empty—Needle at ”E”

It is a good idea to keep the tank over 1/4 full.

This fuel gauge has a non-return type needle which remains at the last indicated position when the ignition switch is turned off.

If the fuel level approaches ”E”, fill the fuel tank as soon as possible.

On inclines or curves, due to the movement of fuel in the tank, the fuel gauge needle may fluctuate.

If the fuel tank is completely empty, the malfunction indicator lamp comes on. Fill the fuel tank immediately.

The indicator lamp goes off after driving several times. If the indicator lamp does not go off, contact your Toyota dealer as soon as possible.

## Engine coolant temperature gauge

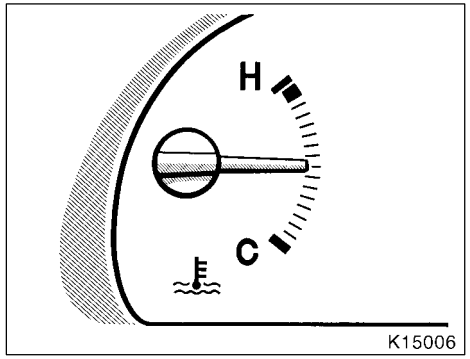


**With tachometer**

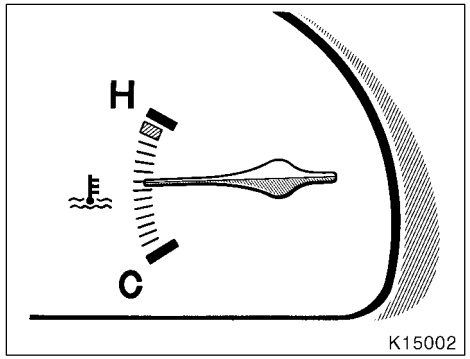


**Without tachometer**

**The gauge indicates the engine coolant temperature when the ignition switch is on. The engine operating temperature will vary with changes in weather and engine load.**

If the needle moves into the red zone, your engine is too hot. If your vehicle overheats, stop your vehicle and allow the engine to cool.

Your vehicle may overheat during severe operating conditions, such as:

- Driving up a long hill on a hot day.
- Reducing speed or stopping after high speed driving.
- Idling for a long period with the air conditioning on in stop-and-go traffic.

**NOTICE**

- ***Do not remove the thermostat in the engine cooling system as this may cause the engine to overheat. The thermostat is designed to control the flow of coolant to keep the temperature of the engine within the specified operating range.***
- ***Do not continue driving with an overheated engine. See ”If your vehicle overheats” in Part 4.***

## Tachometer

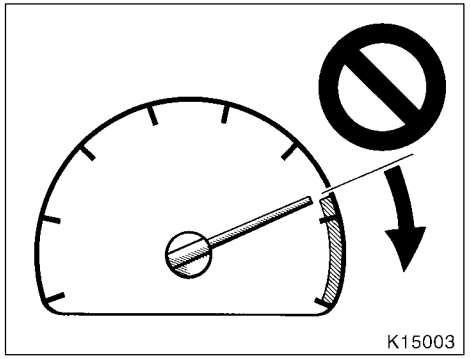


**The tachometer indicates engine speed in thousands of rpm (revolutions per minute). Use it while driving to select correct shift points and to prevent engine lugging and overrevving.**

Driving with the engine running too fast causes excessive engine wear and poor fuel economy. Remember, in most cases the slower the engine speed, the greater the fuel economy.

**NOTICE**

***Do not let the indicator needle get into the red zone. This may cause severe engine damage.***

## Odometer and trip meter

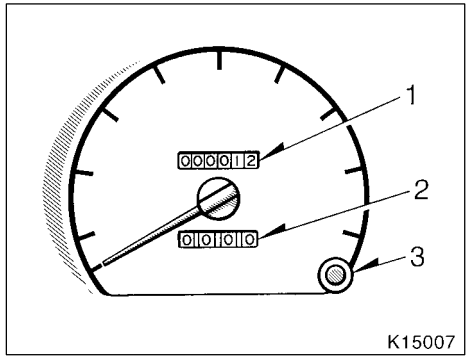


**With tachometer**

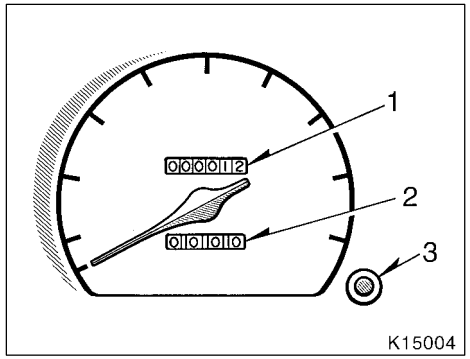


**Without tachometer**

**These meters shows the running distance.**

1. Odometer—It shows the total distance the vehicle has been driven.
2. Trip meter—It shows the distance driven since the last time it was set to zero.
   The black digits on white indicate tenth of kilometers or miles.
3. Trip meter reset knob—It resets the trip meter to zero.
   To reset the trip meter, push the knob.

## Service reminder indicators and warning buzzers

| If the indicator or buzzer comes on... | | Do this. |
|---|---|---|
| (a) | **BRAKE** (type A) (type B) | If parking brake is off, stop and check. |
| (b) | (indicator and buzzer) | Fasten seat belt. |
| (c) | **PASSENGER** | Fasten front passenger’s seat belt. |
| (d) | | Stop and check. |
| (e) | | Stop and check. |
| (f) | **CHECK** | Take vehicle to Toyota dealer. |

| If the indicator or buzzer comes on... | | Do this. |
|---|---|---|
| (g) | ABS (type A) | Take vehicle to Toyota dealer. |
| | (ABS) (type B) | |
| (h) | | Close all doors. |
| (i) | | Take vehicle to Toyota dealer immediately. |
| (j) | Light reminder buzzer | Turn off lights. |
| (k) | Key reminder buzzer | Remove key. |

**(a) Brake System Warning Light**

This light has the following functions:

**Parking brake reminder**

If this light is on, make sure the parking brake is fully released. The light should go off.

**Low brake fluid level warning**

If this light comes on and stays on while you are driving, slow down and pull off the road. Then stop the vehicle carefully. Remember that stopping distance and pedal effort may be increased. There maybe a problem somewhere in the brake system. Check the fluid level of the see-through reservoir.

To make sure the parking brake has not caused the warning light to come on, check to see that the parking brake is fully released.

**If the brake fluid level is low...**

At a safe place, test your brakes by starting and stopping.

- If you judge that the brakes still work adequately, drive cautiously to your nearest dealer or shop for repairs.
- If the brakes are not working, have the vehicle towed in for repairs. (For towing information, see Part 4.)

**⚠ CAUTION**

**It is dangerous to continue driving normally when the brake fluid level is low.**

**If the brake fluid level is correct...**

Have the warning system checked by your Toyota dealer.

**(b) Driver’s Seat Belt Reminder Light and Buzzer**

The light and buzzer remind you to buckle up the driver’s seat belt.

Once the ignition key is turned to ”ON” or ”START”, the reminder light flashes and buzzer sounds if the driver’s seat belt is not pulled out. Unless the driver starts to pull the shoulder belt out of the retractor, the light keeps flashing and the buzzer stops after about 4 to 8 seconds.

**(c) Front Passenger’s Seat Belt Reminder Light**

The light remind you to buckle up the driver’s seat belt.

Once the ignition key is turned to ”ON” or ”START”, the reminder light flashes if a passenger sits in the front passenger seat and the front passenger’s seat belt is not pulled out. Unless the front passenger starts to pull the shoulder belt out of the retractor, the light keeps flashing.

If luggage load is placed on the front passenger seat, depending on its weight and how it is placed on the seat, built-in sensors in the seat cushion may detect the pressure, causing the reminder light to come on.

**(d) Discharge Warning Light**

This light warns that the battery is being discharged.

If it comes on while you are driving, there is a problem somewhere in the charging system.

The engine ignition will continue to operate, however, until the battery is discharged. Turn off the air conditioning, blower, radio,etc., and drive directly to the nearest Toyota dealer or repair shop.

**NOTICE**

***Do not continue driving if the engine drive belt is broken or loose.***

**(e) Low Oil Pressure Warning Light**

This light warns that the engine oil pressure is too low.

If it flickers or stays on while you are driving, pull off the road to a safe place and stop the engine immediately. Call a Toyota dealer or qualified repair shop for assistance.

The light may occasionally flicker when the engine is idling or it may come on briefly after a hard stop. There is no cause for concern if it then goes out when the engine is accelerated slightly.

The light may come on when the oil level is extremely low. It is not designed to indicate low oil level, and the oil level must be checked using the level dipstick.

**NOTICE**

***Do not drive the vehicle with the warning light on—even for one block. It may ruin the engine.***

**(f) Malfunction Indicator Lamp**

This lamp comes on in the following cases.

a. The fuel tank is completely empty. (See ”Fuel gauge” in Chapter 1-5 for instructions.)

b. The fuel tank cap is not tightened securely. (See ”Fuel tank cap” in Chapter 1-2 for instructions.)

c. There is a problem somewhere in your engine or automatic transmission electrical system.

If it comes on while you are driving in case b, have your vehicle checked/repaired by your Toyota dealer as soon as possible.

**(g) ”ABS” Warning Light**

This light warns that there is a problem somewhere in your anti-lock brake system.

If the light comes on while you are driving, have your vehicle checked by your Toyota dealer as soon as possible.

The light will come on when the ignition key is turned to the ”ON” position. After a few seconds, the light will go off.

When the ”ABS” warning light is on (and the brake system warning light is off), the brake system operates conventionally but anti-lock brake system is not assisting brake performance so that the wheels can lock-up during sudden braking or braking on slippery road surfaces.

**(h) Open Door Warning Light**

This light remains on until all the doors and back door are completely closed.

**(i) SRS Airbag Warning Light**

**This light will come on when the ignition key is turned to the ”ACC” or ”ON” position. After about 6 seconds, the light will go off. This means the system of the airbag and front seat belt pretensioners are operating properly.**

The warning light system monitors the airbag sensor assembly, seat belt pretensioner assemblies, inflators, warning light, interconnecting wiring and power sources.

If either of the following conditions occurs, this indicates a malfunction somewhere in the parts monitored by the warning light system. Contact your Toyota dealer as soon as possible to service the vehicle.

- The light does not come on when the ignition key is turned to the ”ACC” or ”ON” position or remains on.
- The light comes on or flashes while driving.

**(j) Light Reminder Buzzer**

This buzzer will sound If the headlight switch is left on and the driver’s door is opened with the key removed from the ignition switch.

**(k) Key Reminder Buzzer**

This buzzer reminds you to remove the key when you open the driver’s door with the ignition key in the ”ACC” or ”LOCK” position.

**CHECKING SERVICE REMINDER INDICATORS**

1. Apply the parking brake.
2. Open one of the doors.
   The open door warning light should come on.
3. Close the door.
   The open door warning light should go off.
4. Turn the ignition key to ”ACC”.
   The SRS airbag warning light should come on. It goes off after about 6 seconds.
5. Turn the ignition key to ”ON”, but do not start the engine.
   All the service reminder indicators except the open door warning light and SRS airbag warning light should come on. The ”ABS” warning light goes off after a few seconds.

If any service reminder indicator or warning buzzer does not function as described above, either the bulb is burned out or the circuit is in need of repair. Have it checked by your Toyota dealer as soon as possible.

# Part 1
# OPERATION OF INSTRUMENTS AND CONTROLS—

## Chapter 1- 6
## Ignition switch, Transmission and Parking brake


- Ignition switch with steering lock
- Automatic transmission
- Manual transmission
- Parking brake


### Ignition switch with steering lock

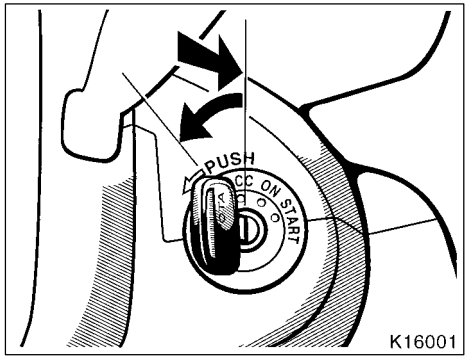


**”START”—Starter motor on. The key will return to the ”ON” position when released.**

For starting tips, see Part 3.

**”ON”—Engine on and all accessories on.**

This is the normal driving position.

**”ACC”—Accessories such as the radio operate, but the engine is off.**

If you leave the key in the ”ACC” or ”LOCK” position and open the driver’s door, a buzzer will remind you to remove the key.

**”LOCK”—Engine is off and the steering wheel is locked. The key can be removed only at this position.**

You must push in the key to turn the key from ”ACC” to the ”LOCK” position. On vehicles with an automatic transmission, the selector lever must be in the ”P” position before pushing the key.

When starting the engine, the key may seem stuck at the ”LOCK” position. To free it, first be sure the key is pushed all the way in, and then rock the steering wheel slightly while turning the key gently.

**⚠ CAUTION**

**For manual transmission:**
**Never remove the key when the vehicle is moving, as this will lock the steering wheel and result in loss of steering control.**

***NOTICE***

***Do not leave the key in the ”ON” position if the engine is not running. The battery will discharge and the ignition could be damaged.***

## Automatic transmission (3- speed type)

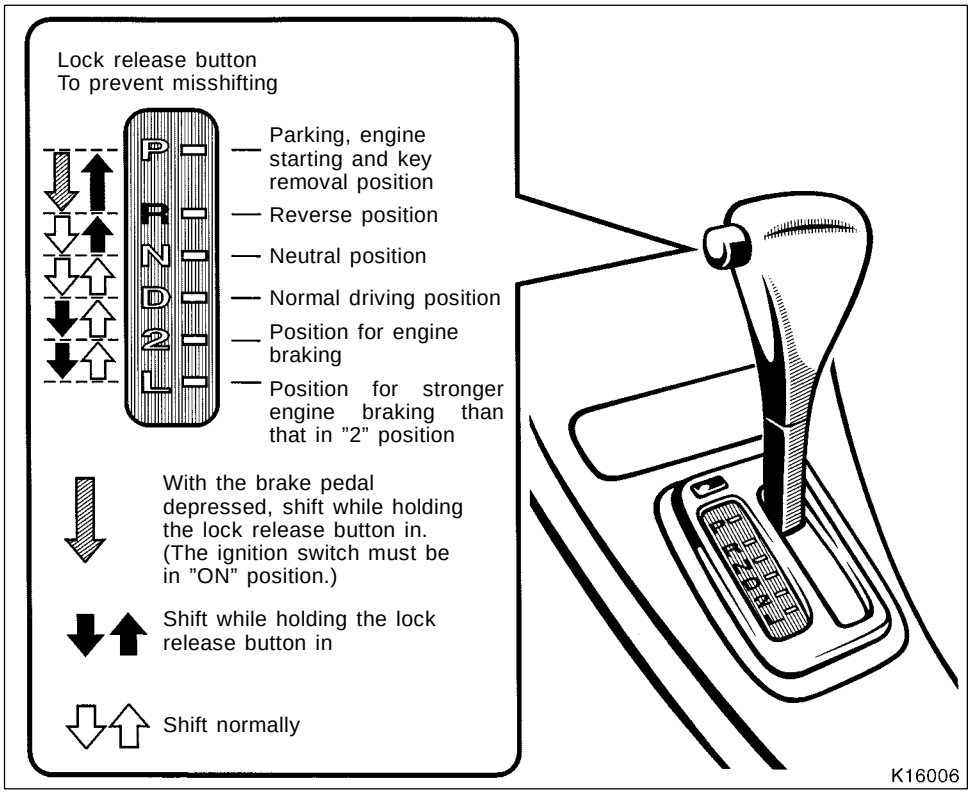


Your automatic transmission has a shift lock system to minimize the possibility of incorrect operation. This means you can only shift out of ”P” position when the brake pedal is depressed (with the ignition switch in ”ON” position and the lock release button depressed).

**(a) Normal driving**

1. Start the engine as instructed in ”How to start the engine” in Part 3. The transmission must be in ”P” or ”N”.
2. With your foot holding down the brake pedal, shift the selector lever to ”D”.

In ”D” position, the automatic transmission system will select the most suitable gear for running conditions such as normal cruising, hill climbing, hard towing, etc.

**⚠ CAUTION**

**Never put your foot on the accelerator pedal while shifting.**

3. Release the parking brake and brake pedal. Depress accelerator pedal slowly for smooth starting.

**(b) Using engine braking**

To use engine braking, you can downshift the transmission as follows:

- Shift into the ”2” position when the vehicle speed is lower than 84 km/h (52 mph). The transmission will downshift to the second gear and more engine braking will be obtained.
- Shift into the ”L” position when the vehicle speed is lower than 39 km/h (24 mph). The transmission will downshift to the first gear and maximum engine braking will be applied.

**⚠ CAUTION**

**Be careful when downshifting on a slippery surface. Abrupt shifting could cause the vehicle to spin or skid.**

***NOTICE***

***To prevent engine overrevving, do not downshift if you are going faster than the above speed in each position.***

**(c) Using the ”2” and ”L” positions**

The ”2” and ”L” positions are used for strong engine braking as described previously.

With the selector lever in ”2” or ”L”, you can start the vehicle in motion as with the lever in ”D”.

With the selector lever in ”2”, the vehicle will start in the first gear and automatically shift to the second gear.

With the selector lever in ”L”, the transmission is engaged in the first gear.

***NOTICE***

◆ ***Be careful not to overrev the engine. Watch the tachometer to keep engine rpm from going into the red zone. The approximate maximum allowable speed for each position is given below for your reference:***

***”2” . . . . . 100 km/h (62 mph)***
***”L” . . . . . 55 km/h (34 mph)***

◆ ***Do not continue hill climbing or hard towing for a long time in the ”2” or ”L” position. This may cause severe automatic transmission damage from overheating. To prevent such damage, ”D” position should be used in hill climbing or hard towing.***

**(d) Backing up**

1. Bring the vehicle to a complete stop.
2. With the brake pedal held down with your foot, shift the selector lever to the ”R” position.

***NOTICE***

***Never shift into reverse while the vehicle is moving.***

**(e) Parking**

1. Bring the vehicle to a complete stop.
2. Pull the parking brake lever up fully to securely apply the parking brake.
3. With the brake pedal pressed down, shift the selector lever to the ”P” position.

**⚠ CAUTION**

**While the vehicle is moving, never attempt to move the selector lever into ”P” position under any circumstances. Serious mechanical damage and loss of vehicle control may result.**

**(f) Good driving practice**

**⚠ CAUTION**

**Always keep your foot on the brake pedal while stopped with the engine running. This prevents the vehicle from creeping.**

***NOTICE***

***Do not hold the vehicle on an upgrade with the accelerator pedal. It can cause the transmission to overheat. Always use the brake pedal or parking brake.***

**(g) Rocking your vehicle if stuck**

**⚠ CAUTION**

**If your vehicle becomes stuck in snow, mud, sand, etc., then you may attempt to rock the vehicle free by moving it forward and backward. Do not attempt, this procedure if people or objects are anywhere near the vehicle. During the rocking operation the vehicle may suddenly move forward or backward as it becomes unstuck, causing injury or damage to nearby people or objects.**

***NOTICE***

***If you rock your vehicle, observe the following precautions to prevent damage to the transmission and other parts.***

- ***Do not depress the accelerator pedal while shifting the selector lever or before the transmission is completely shifted to forward or reverse gear.***
- ***Do not race the engine and avoid spinning the wheels.***
- ***If your vehicle remains stuck after rocking the vehicle several times, consider other ways such as towing.***

**(h) If you cannot shift the selector lever out of ”P” position**

If you cannot shift the selector lever from the ”P” position even though the brake pedal is depressed, use the shift lock override button. For instructions, see ”If you cannot shift automatic transmission selector lever” in Part 4.

## Automatic transmission (4- speed type)

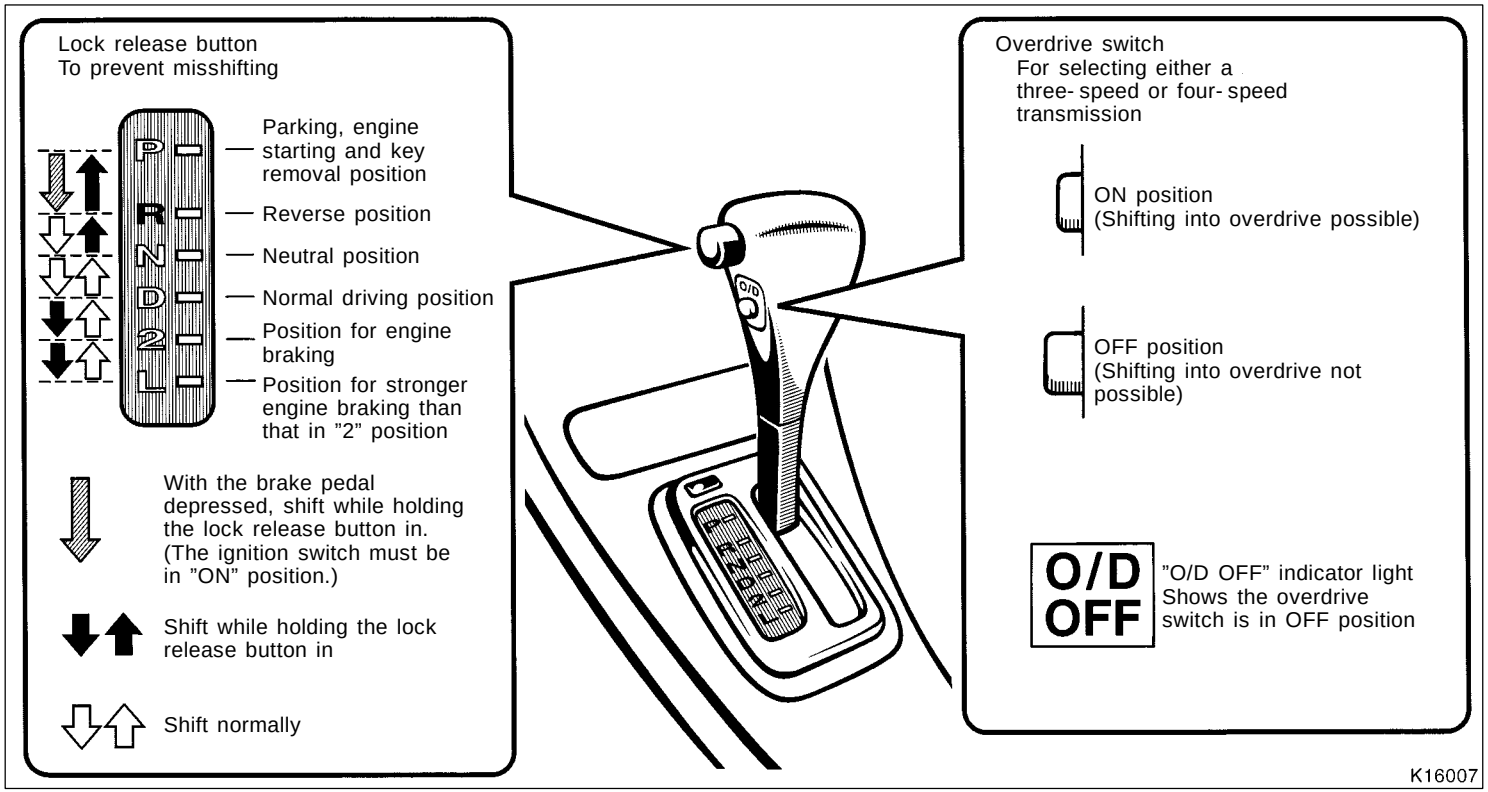

Your automatic transmission has a shift lock system to minimize the possibility of incorrect operation. This means you can only shift out of ”P” position when the brake pedal is depressed (with the ignition switch in ”ON” position and the lock release button depressed).

**(a) Normal driving**

1. Start the engine as instructed in ”How to start the engine” in Part 3. The transmission must be in ”P” or ”N”.
2. With your foot holding down the brake pedal, shift the selector lever to ”D”.

In ”D” position, the automatic transmission system will select the most suitable gear for running conditions such as normal cruising, hill climbing, hard towing, etc.

Always turn the overdrive switch on for better fuel economy and quieter driving. If the engine coolant temperature is low, the transmission will not shift into the overdrive gear even with the overdrive switch on.

**⚠ CAUTION**

**Never put your foot on the accelerator pedal while shifting.**

3. Release the parking brake and brake pedal. Depress the accelerator pedal slowly for smooth starting.

**(b) Using engine braking**

To use engine braking, you can downshift the transmission as follows:

- Turn off the overdrive switch. The ”O/D OFF” indicator light will come on and the transmission will downshift to the third gear.
- Shift into the ”2” position when the vehicle speed is lower than 83 km/h (51 mph). The transmission will downshift to the second gear and more engine braking will be obtained.
- Shift into the ”L” position when the vehicle speed is lower than 44 km/h (27 mph). The transmission will downshift to the first gear and maximum engine braking will be applied.

**⚠ CAUTION**

**Be careful when downshifting on a slippery surface. Abrupt shifting could cause the vehicle to spin or skid.**

***NOTICE***

***To prevent engine overrevving, do not downshift if you are going faster than the above speed in each position.***

**(c) Using the ”2” and ”L” positions**

The ”2” and ”L” positions are used for strong engine braking as described previously.

With the selector lever in ”2” or ”L”, you can start the vehicle in motion as with the lever in ”D”.

With the selector lever in ”2”, the vehicle will start in the first gear and automatically shift to the second gear.

With the selector lever in ”L”, the transmission is engaged in the first gear.

***NOTICE***

◆ ***Be careful not to overrev the engine. Watch the tachometer to keep engine rpm from going into the red zone. The approximate maximum allowable speed for each position is given below for your reference:***

***”2” . . . . . 96 km/h (59 mph)***
***”L” . . . . . 53 km/h (32 mph)***

◆ ***Do not continue hill climbing or hard towing for a long time in the ”2” or ”L” position. This may cause severe automatic transmission damage from overheating. To prevent such damage, ”D” position should be used in hill climbing or hard towing.***

**(d) Backing up**

1. Bring the vehicle to a complete stop.
2. With the brake pedal held down with your foot, shift the selector lever to the ”R” position.

***NOTICE***

***Never shift into reverse while the vehicle is moving.***

**(e) Parking**

1. Bring the vehicle to a complete stop.
2. Pull the parking brake lever up fully to securely apply the parking brake.
3. With the brake pedal pressed down, shift the selector lever to the ”P” position.

**⚠ CAUTION**

**While the vehicle is moving, never attempt to move the selector lever into ”P” position under any circumstances. Serious mechanical damage and loss of vehicle control may result.**

**(f) Good driving practice**

If the transmission is repeatedly upshifted and downshifted between third gear and overdrive when climbing a gentle slope, the overdrive switch should be turned off. Be sure to turn the switch on immediately afterward.

**⚠ CAUTION**

**Always keep your foot on the brake pedal while stopped with the engine running. This prevents the vehicle from creeping.**

***NOTICE***

***Do not hold the vehicle on an upgrade with the accelerator pedal. It can cause the transmission to overheat. Always use the brake pedal or parking brake***

**(g) Rocking your vehicle if stuck**

**⚠ CAUTION**

**If your vehicle becomes stuck in snow, mud, sand, etc., then you may attempt to rock the vehicle free by moving it forward and backward. Do not attempt, this procedure if people or objects are anywhere near the vehicle. During the rocking operation the vehicle may suddenly move forward or backward as it becomes unstuck, causing injury or damage to nearby people or objects.**

**NOTICE**

***If you rock your vehicle, observe the following precautions to prevent damage to the transmission and other parts.***

- ***Do not depress the accelerator pedal while shifting the selector lever or before the transmission is completely shifted to forward or reverse gear.***
- ***Do not race the engine and avoid spinning the wheels.***
- ***If your vehicle remains stuck after rocking the vehicle several times, consider other ways such as towing.***

**(h) If you cannot shift the selector lever out of ”P” position**

If you cannot shift the selector lever from the ”P” position even though the brake pedal is depressed, use the shift lock override button. For instructions, see ”If you cannot shift automatic transmission selector lever” in Part 4.

## Manual transmission

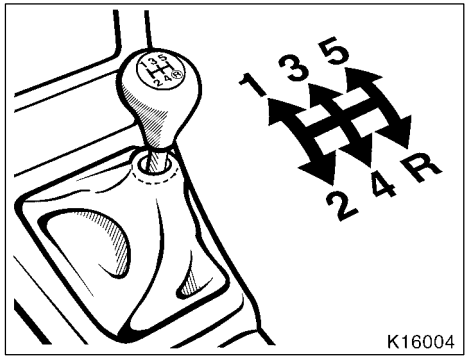


**The shift pattern is as shown above.**

Press the clutch pedal down fully while shifting, and then release it slowly. Do not rest your foot on the pedal while driving, because it will cause clutch trouble. And do not use the clutch to hold the vehicle when stopped on an uphill grade–use the parking brake.

**Recommended shifting speeds**

The transmission is fully synchronized and upshifting or downshifting is easy.

For the best compromise between fuel economy and vehicle performance, you should upshift or downshift at the following speeds:

| gear | km/h (mph) |
|---|---|
| 1 to 2 or 2 to 1 | 24 (15) |
| 2 to 3 or 3 to 2 | 40 (25) |
| 3 to 4 or 4 to 3 | 64 (40) |
| 4 to 5 or 5 to 4 | 72 (45) |

Downshift to the appropriate gear if acceleration is needed when you are cruising below the above downshifting speeds.

Upshifting too soon or downshifting too late will cause lugging and, possibly, pinging. Regularly revving the engine to maximum speed in each gear will cause excessive engine wear and high fuel consumption.

### Maximum allowable speeds

To get on a highway or to pass slower traffic, maximum acceleration may be necessary. Make sure you observe the following maximum allowable speeds in each gear:

| gear | km/h (mph) |
|---|---|
| 1 | 46 (29) |
| 2 | 85 (53) |
| 3 | 132 (82) |
| 4 | 184(114) |

**NOTICE**

***Do not downshift if you are going faster than the maximum allowable speed for the next lower gear.***

### Good driving practice

If it is difficult to shift into reverse, put the transmission in neutral, release the clutch pedal momentarily, and then try again.

**⚠ CAUTION**

**Be careful when downshifting on a slippery surface. Abrupt shifting could cause the vehicle to spin or skid.**

**NOTICE**

***Make sure the vehicle is completely stopped before shifting into reverse.***

## Parking brake

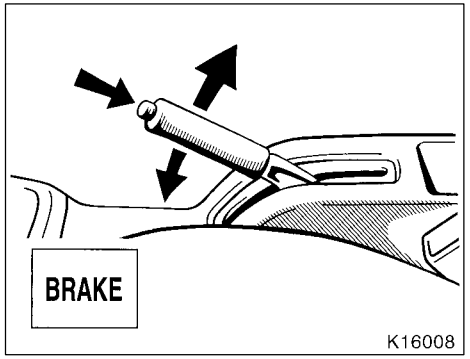


**Type A**

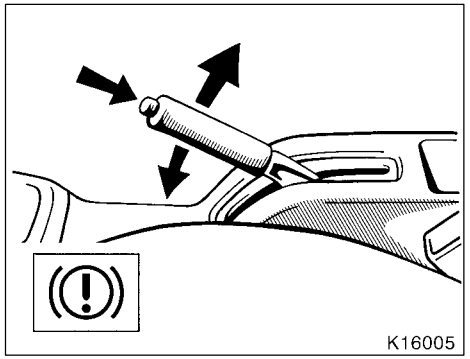


**Type B**

**When parking, firmly apply the parking brake to avoid inadvertent creeping.**

To set: Pull up the lever. For better holding power, first depress the brake pedal and hold it while setting the parking brake.
To release: Pull up the lever slightly, press the thumb button, and lower.

To remind you that the parking brake is set, the parking brake reminder light in the instrument panel remains on until you release the parking brake.

**⚠ CAUTION**

**Before driving, be sure the parking brake is fully released and the parking brake reminder light is off.**

# Part 1
# OPERATION OF INSTRUMENTS AND CONTROLS—

## Chapter 1-7
## Car audio system and Air conditioning system

### Car audio system

- Reference
- Using your audio system: some basics
- Using your audio system: controls and features
- Car audio system operating hints

### Air conditioning system

- Controls
- Air flow selector settings
- Operating tips
- Side vents

### Car audio system——Reference

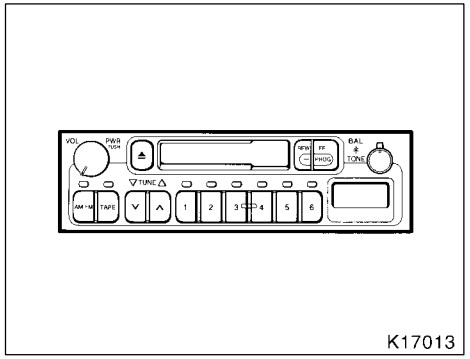


Type 1: AM·FM ETR radio/cassette player

Type 2: AM·FM ETR radio/cassette player/compact disc auto changer controller

**Type 3: AM·FM ETR radio/compact disc player/compact disc auto changer controller**

## —Using your audio system: some basics

This section describes some of the basic features on Toyota audio systems. Some information may not pertain to your system.

Your audio system works when the ignition key is in the ”ACC” or ”ON” position.

**TURNING THE SYSTEM ON AND OFF**

Push ”PWR/VOL” and ”VOL/PWR” to turn the audio system on and off.

Push ”AM”, ”FM”, ”AM·FM”, ”TAPE” or ”CD” to turn on that function without pushing ”PWR/VOL” and ”VOL/PWR”.

You can turn on each player by inserting a cassette tape or compact disc.

You can turn off each player by ejecting the cassette tape or compact disc. If the audio system was previously off, then the entire audio system will be turned off when you eject the cassette tape or compact disc. If the another function was previously playing, it will come on again.

**SWITCHING BETWEEN FUNCTIONS**

Push ”AM”, ”FM”, ”AM·FM”, ”TAPE” or ”CD” if the system is already on but you want to switch from one function to the other.

**TONE AND BALANCE**

For details about your system’s tone and balance controls, see the description of your own system.

**Tone**

How good an audio program sounds to you is largely determined by the mix of the treble and bass levels. In fact, different kinds of music and vocal programs usually sound better with different mixes of treble and bass.

**Balance**

A good balance of the left and right stereo channels and of the front and rear sound levels is also important.

Keep in mind that if you are listening to a stereo recording or broadcast, changing the right/left balance will increase the volume of one group of sounds while decreasing the volume of another.

### YOUR RADIO ANTENNA

To lower a manual antenna, carefully push it down.

**NOTICE**

***To prevent damage to the antenna, make sure it is retracted before driving your Toyota through an automatic car wash.***

### YOUR CASSETTE PLAYER

When you insert a cassette, the exposed tape should be to the right.

**NOTICE**

***Do not oil any part of the player and do not insert anything other than cassette tapes into the slot, or the tape player may be damaged.***

### YOUR COMPACT DISC PLAYER

When you insert a disc, gently push it in with the label side up. (The player will automatically eject a disc if the label side is down.) The compact disc player will play from track 1 through the end of the disc. Then it will play from track 1 again.

**NOTICE**

***Never try to disassemble or oil any part of the compact disc player. Do not insert anything except a compact disc into the slot.***

#### 8 cm (3 in.) compact disc singles

Your compact disc player does not need an adaptor to play compact disc singles. Compact disc singles are about 8 cm (3 in.) in diameter- smaller than standard discs.

After you eject a compact disc single, do not insert a standard 12 cm (5 in.) disc until ”DISC” disappears from the display.

**NOTICE**

***Do not use an adaptor for compact disc singles—it could cause tracking errors or interfere with the ejection of compact discs.***

## —Using your audio system: controls and features

**▶Type 1**

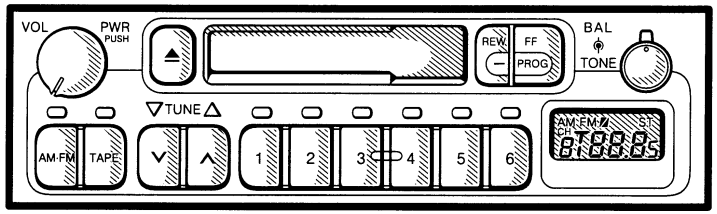


K17014

Details of specific buttons, controls, and features are described in the alphabetical listing that follows.

**1 2 3 4 5 6 (Preset buttons)**

These buttons are used to preset and tune in radio stations.

To preset a station to a button: Tune in the desired station (see ”TUNE” button). Push and hold down the button until you hear a beep—this will set the station to the button. The button number will appear on the display.

To tune in to a preset station: Push the button for the station you want. The button number and station frequency will appear on the display.

These systems can store one AM and one FM station for each button. The preset station memory will be canceled out if the power source is interrupted (battery disconnected or fuse blown).

**⏏ (Eject button)**

Push this button to eject a cassette.

**AM·FM**

Push ”AM·FM” to switch between the AM and FM bands. ”AM” or ”FM” will appear on the display.

If the audio system is off, you can turn on the radio by pushing ”AM·FM”. Also, push ”AM·FM” to switch from cassette operation to radio operation.

**BAL (Balance)**

Move the ”BAL” ring around ”TONE” to adjust the balance between the right and left speakers

**FF (Fast forward)**

Push the ”FF” to fast forward a cassette tape.

To stop the tape while it is fast forwarding, lightly push the ”REW”.

If a tape fast forwards completely, the cassette player will play the other side of the tape, using the auto-reverse feature.

**PROG (Program)**

Push ”PROG” to select the other side of a cassette tape.

Auto-reverse feature: After the cassette player reaches the end of a tape side, it automatically reverses and begins to play the other side. This is true whether the cassette was playing or fast forwarding.

**REW (Rewind)**

Push the ”REW” to rewind to a tape.

To stop the tape while it is rewinding, lightly push the ”FF”.

If a tape side rewinds completely, the cassette player will stop and then play that same side.

**ST (Stereo reception) display**

Your radio automatically changes to stereo reception when a stereo broadcast is received. ”ST” appears on the display. If the signal becomes weak, the radio reduces the amount of channel separation to prevent the weak signal from creating noise. If the signal becomes extremely weak, the radio switches from stereo to mono reception.

**TAPE**

Push ”TAPE” to switch from radio operation to cassette operation. If the audio system is off, you can turn on the cassette player by pushing ”TAPE”. In both cases, a cassette must already be loaded in the player.

**TONE**

Turn the ”TONE” knob to adjust the tone.

**TUNE**

**Tuning**

Your Toyota has an electronic tuning radio (ETR). Push and release the ”∧” (up) or ”∨” (down) side of ”TUNE” to step up or down the station band. (If you hear a beep, you held the button too long and the radio will go into the seek mode.)

**Seeking**

In the seek mode, the radio finds and plays the next station up or down the station band.

To seek a station, push and hold the ”∧” or ”∨” side of ”TUNE” until you hear a beep. Do this again to find another station.

**VOL/PWR (Volume/Power)**

Push ”VOL/PWR” to turn the audio system on and off. Turn ”VOL/PWR” to adjust the volume.

▶**Type 2**

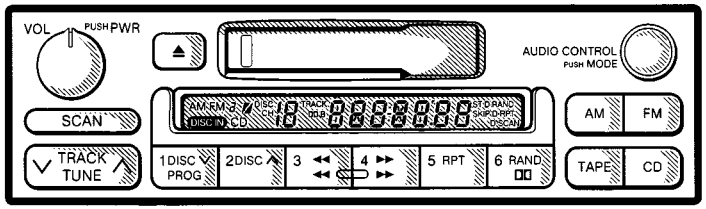


Z17021

Details of specific buttons, controls, and features are described in the alphabetical listing that follows.

**1 2 3 4 5 6 (Preset buttons)**

These buttons are used to preset and tune in radio stations.

To preset a station to a button: Tune in the desired station (see ”TUNE” button). Push and hold down the button until you hear a beep—this will set the station to the button. The button number will appear on the display.

To tune in to a preset station: Push the button for the station you want. The button number and station frequency will appear on the display.

These systems can store one AM and two FM stations for each button (The display will show ”AM”, ”FM1” or ”FM2” when you push ”AM” or ”FM”).

**⏏ (Eject button)**

Push this button to eject a cassette.

After you turn the ignition to ”LOCK”, you will be able to eject a cassette but you will not be able to reinsert it.

**◀◀/▶▶ (Reverse/Fast forward buttons)**

**Cassette Player**

Push the fast forward button to fast forward a cassette tape. ”FF” will appear on the display. Push the reverse button to rewind a tape. ”REW” will appear on the display.

To stop the tape while it is fast forwarding, push the fast forward button or ”TAPE”; to stop the tape while it is rewinding, push the reverse button or ”TAPE”.

If a tape side rewinds completely, the cassette player will stop and then play that same side. If a tape fast forwards completely, the cassette player will play the other side of the tape, using the auto-reverse feature.

**Compact Disc Player**

If you want to fast forward or reverse through a compact disc track, push and hold in the fast forward or reverse button. When you release the button, the compact disc player will resume playing.

**AM**

Push ”AM” to switch the AM band. ”AM” will appear on the display.

If the audio system is off, you can turn on the radio by pushing ”AM”. Also, push ”AM” to switch from cassette or compact disc operation to radio operation.

**AUDIO CONTROL / MODE**

**Manual tone adjustment function—**

This knob is used to adjust the tone manually.

For low-pitch tone adjustment, push ”AUDIO CONTROL / MODE” repeatedly until ”BAS” appears on the display. Then turn the knob to suit your preference.

The display will show the range from ”BAS -5” to ”BAS 5”.

For high-pitch tone adjustment, push ”AUDIO CONTROL / MODE” repeatedly until ”TRE” appears on the display. Then turn the knob to suit your preference.

The display will show the range from ”TRE -5” to ”TRE 5”.

**Sound balance adjustment function—**

This knob is also used to adjust the sound balance between the front and rear, and the right and left speakers.

For front/rear adjustment, push ”AUDIO CONTROL / MODE” repeatedly until ”FAd” appears on the display. Then turn the knob to adjust the front/rear balance.

The display will show the range from ”FAd F7” to ”FAd R7”.

For left/right adjustment, push ”AUDIO CONTROL / MODE” repeatedly until ”BAL” appears on the display. Then turn the knob to adjust the left/right balance.

The display will show the range from ”BAL L7” to ”BAL R7”.

**CD (Compact Disc)**

Push ”CD” to switch from radio or cassette operation to compact disc operation. If the audio system is off, you can turn on the compact disc player by pushing ”CD”. In both cases, a disc must already be loaded in the player.

When the audio is set into compact disc operation, the display shows the track or, track and disc number currently being played. Each time you push ”CD”, the system changes between single disc player and automatic changer.

If the player malfunctions, your audio system will display one of the six following error messages.

**If ”WAIT” appears on the display,** it indicates inside the player unit may be too hot due to the very high ambient temperature. Remove the disc or magazine from the player and allow the player to cool down.

**If ”Err 1” appears on the display,** it indicates the disc is dirty, damaged, or it was inserted up-side down. Clean the disc or insert it correctly.

**If ”Err 2” appears on the display,** it indicates no disc is loaded inside the magazine, insert a disc.

**If ”Err 3” or ”Err 4” on the display,** it indicates there is a trouble inside the system. Eject the disc or magazine. Set the disc or magazine again.

**If ”OPEn” appears on the display,** it indicates the compact disc auto changer lid is open. Close the compact disc auto changer lid.

**If the malfunction is not rectified,** take your vehicle to your Toyota dealer.

**DISC** ∨∧

Compact disc auto changer only—

By using this button, you can select a disc you wish to listen to.

Push either side of the button until the number of the disc you want to listen to appears on the display.

**Dolby® DD B NR***

If you are listening to a tape that was recorded with Dolby® B Noise Reduction, push the button marked with the double-D symbol. The double-D symbol will appear on the display. Push the button again to turn off Dolby® B NR.

The Dolby NR mode reduces tape noise by about 10 dB. For best sound reproduction, play your tapes with this button on or off according to the mode used for recording the tape.

*: Dolby noise reduction manufactured under license from Dolby Laboratories Licensing Corporation. ”DOLBY” and the double D symbol DD are trademarks of Dolby Laboratories Licensing Corporation.

**FM**

Push ”FM” to switch the FM band. ”FM1” or ”FM2” will appear on the display. This system allows you to set twelve FM stations, two for each button.

If the audio system is off, you can turn on the radio by pushing ”FM”. Also, push ”FM” to switch from cassette or compact disc operation to radio operation.

**PROG (Program)**

Push ”PROG” to select the other side of a cassette tape. The display indicates which side is currently selected (”◢ ” indicates top side, ”◤” indicates bottom side).

Auto-reverse feature: After the cassette player reaches the end of a tape side, it automatically reverses and begins to play the other side. This is true whether the cassette was playing or fast forwarding.

**RAND (Random)**

There are two random features—you can either listen to the tracks on all the compact discs in the magazine in random order, or only listen to the tracks on a specific compact disc in random order.

Random playing for the tracks on a disc: Quickly push and release ”RAND”. ”RAND” will appear on the display. The disc you are listening to will play in random order. If you hear a beep, you held the button too long, and the player will play all the tracks in the magazine in random order. To turn off the random feature, push the ”RAND” a second time.

Compact disc auto changer only—

Random playing for all the tracks in the magazine:
Push and hold ”RAND” until you hear a beep. ”D·RAND” will appear on the display and the player will perform all the tracks on all the discs in the magazine in random order. To turn off the random feature, push ”RAND” a second time.

**RPT (Repeat)**

There are two repeat features—you can either replay a disc track or a whole compact disc.

Repeating a track:
Quickly push and release ”RPT” while the track is playing. ”RPT” will appear on the display. If you hear a beep, you held the button too long, and the player will repeat the whole disc. When the track ends, it will automatically be replayed. This process will be continued until you push the button again to turn off the repeat feature.

Compact disc auto changer only—

Repeating a disc:
Push and hold ”RPT” until you hear a beep. ”D·RPT” will appear on the display. The player will repeat all the tracks on the disc you are listening to. When the disc ends, the player will automatically go back to the top track of the disc and replay. This process will be continued until you push the button again to turn off the repeat feature.

**SCAN**

**Radio**

You can either scan all the frequencies on a band or scan only the preset stations for that band.

To scan the preset stations:
Push and hold ”SCAN” until you hear a beep. The radio will tune in the next preset station up the band, stay there for a few seconds, and then move to the next preset station. To select a station, push ”SCAN” a second time.

To scan all the frequencies:
Quickly push and release ”SCAN”. If you hear a beep, you held the button too long, and the radio will scan the preset stations. The radio will find the next station up the station band, stay there for a few seconds, and then scan again. To select a station, push ”SCAN” a second time.

**Compact disc player**

There are two scan features—you can either scan the tracks on a specific disc or scan the first tracks of all the discs in the magazine.

Scanning for the tracks on a disc:
Quickly push and release ”SCAN”. ”SCAN” will appear on the display and the player will scan all the tracks on the disc you are listening to. If you hear a beep, you held the button too long, and the player will scan the first tracks of all the discs in the magazine. To select a track, push the ”SCAN” a second time. If the player scanned all the tracks on the disc, it will stop scanning.

Compact disc auto changer only—

Scanning for the first tracks of all the discs in the magazine:
Push and hold ”SCAN” until you hear a beep. ”D·SCAN” will appear on the display and the player will perform the first track of the next disc. To select a disc, push the ”SCAN” a second time. If the player has scanned all the discs, it will stop scanning.

**ST (Stereo reception) display**

Your radio automatically changes to stereo reception when a stereo broadcast is received. ”ST” appears on the display. If the signal becomes weak, the radio reduces the amount of channel separation to prevent the weak signal from creating noise. If the signal becomes extremely weak, the radio switches from stereo to mono reception.

**TAPE**

Push ”TAPE” to switch from radio or compact disc operation to cassette operation. If the audio system is off, you can turn on the cassette player by pushing ”TAPE”. In both cases, a cassette must already be loaded in the player.

**TRACK (Track up/down button): Compact disc player**

By using this button, you can skip up or down to a different track.

Push either side of the track button until the number of the track you want to listen to appears on the display. If you want to return to the beginning of the current track, push the down side of the button one time, quickly.

**TUNE**

**Tuning**

Your Toyota has an electronic tuning radio (ETR). Push and release the ”∧” (up) or ”∨” (down) side of ”TUNE” to step up or down the station band. (If you hear a beep, you held the button too long and the radio will go into the seek mode.)

**Seeking**

In the seek mode, the radio finds and plays the next station up or down the station band.

To seek a station, push and hold the ”∧” or ”∨” side of ”TUNE” until you hear a beep. Do this again to find another station.

**VOL/PWR (Volume/Power)**

Push ”VOL/PWR” to turn the audio system on and off. Turn ”VOL/PWR” to adjust the volume.

▶**Type 3**

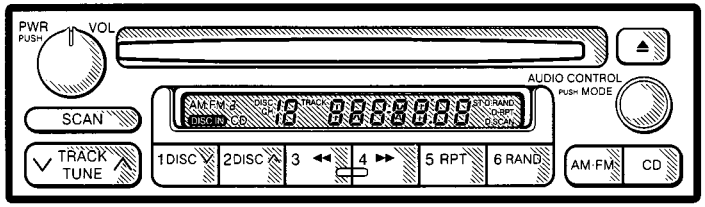


Z17022

Details of specific buttons, controls, and features are described in the alphabetical listing that follows.

**1 2 3 4 5 6 (Preset buttons)**

These buttons are used to preset and tune in radio stations.

To preset a station to a button: Tune in the desired station (see ”TUNE” button). Push and hold down the button until you hear a beep—this will set the station to the button. The button number will appear on the display.

To tune in to a preset station: Push the button for the station you want. The button number and station frequency will appear on the display.

These systems can store one AM and two FM stations for each button (The display will show ”AM”, ”FM1” or ”FM2” when you push ”AM·FM”).

**⏏ (Eject button)**

Push this button to eject a compact disc.

After you turn the ignition to ”LOCK”, you will be able to eject a disc but you will not be able to reinsert it.

**◀◀/▶▶ (Reverse/Fast forward buttons)**

If you want to fast forward or reverse through a compact disc track, push and hold in the fast forward or reverse button. When you release the button, the compact disc player will resume playing.

**AM·FM**

Push ”AM·FM” to switch between the AM and FM bands. ”AM”, ”FM1” or ”FM2” will appear on the display. These systems allow you to set twelve FM stations, two for each button.

If the audio system is off, you can turn on the radio by pushing ”AM·FM”. Also, push ”AM·FM” to switch from compact disc operation to radio operation.

**AUDIO CONTROL / MODE**

**Manual tone adjustment function—**

This knob is used to adjust the tone manually.

For low-pitch tone adjustment, push ”AUDIO CONTROL / MODE” repeatedly until ”BAS” appears on the display. Then turn the knob to suit your preference.

The display will show the range from ”BAS -5” to ”BAS 5”.

For high-pitch tone adjustment, push ”AUDIO CONTROL / MODE” repeatedly until ”TRE” appears on the display. Then turn the knob to suit your preference.

The display will show the range from ”TRE -5” to ”TRE 5”.

**Sound balance adjustment function—**

This knob is also used to adjust the sound balance between the front and rear, and the right and left speakers.

For front/rear adjustment, push ”AUDIO CONTROL / MODE” repeatedly until ”FAd” appears on the display. Then turn the knob to adjust the front/rear balance.

The display will show the range from ”FAd F7” to ”FAd R7”.

For left/right adjustment, push ”AUDIO CONTROL / MODE” repeatedly until ”BAL” appears on the display. Then turn the knob to adjust the left/right balance.

The display will show the range from ”BAL L7” to ”BAL R7”.

**CD (Compact Disc)**

Push ”CD” to switch from radio operation to compact disc operation. If the audio system is off, you can turn on the compact disc player by pushing ”CD”. In both cases, a disc must already be loaded in the player.

When the audio is set into compact disc operation, the display shows the track or, track and disc number currently being played. Each time you push ”CD”, the system changes between built-in single disc player and automatic changer.

If the player malfunctions, your audio system will display one of the six following error messages.

**If ”WAIT” appears on the display,** it indicates inside the player unit may be too hot due to the very high ambient temperature. Remove the disc or magazine from the player and allow the player to cool down.

**If ”Err 1” appears on the display,** it indicates the disc is dirty, damaged, or it was inserted up-side down. Clean the disc or insert it correctly.

**If ”Err 2” appears on the display,** it indicates no disc is loaded inside the magazine, insert a disc.

**If ”Err 3” or ”Err 4” on the display,** it indicates there is a trouble inside the system. Eject the disc or magazine. Set the disc or magazine again.

**If ”OPEn” appears on the display,** it indicates the compact disc auto changer lid is open. Close the compact disc auto changer lid.

**If the malfunction is not rectified,** take your vehicle to your Toyota dealer.

**DISC ∨∧**

Compact disc auto changer only—

By using this button, you can select a disc you wish to listen to.

Push either side of the button until the number of the disc you want to listen to appears on the display.

**PWR/VOL (Power/Volume)**

Push ”PWR/VOL” to turn the audio system on and off. Turn ”PWR/VOL” to adjust the volume.

**RAND (Random)**

There are two random features—you can either listen to the tracks on all the compact discs in the magazine in random order, or only listen to the tracks on a specific compact disc in random order.

Random playing for the tracks on a disc:
Quickly push and release ”RAND”. ”RAND” will appear on the display. The disc you are listening to will play in random order. If you hear a beep, you held the button too long, and the player will play all the tracks in the magazine in random order. To turn off the random feature, push the ”RAND” a second time.

Compact disc auto changer only—

Random playing for all the tracks in the magazine:
Push and hold ”RAND” until you hear a beep. ”D·RAND” will appear on the display and the player will perform all the tracks on all the discs in the magazine in random order. To turn off the random feature, push ”RAND” a second time.

**RPT (Repeat)**

There are two repeat features—you can either replay a disc track or a whole compact disc.

Repeating a track:
Quickly push and release ”RPT” while the track is playing. ”RPT” will appear on the display. If you hear a beep, you held the button too long, and the player will repeat the whole disc. When the track ends, it will automatically be replayed. This process will be continued until you push the button again to turn off the repeat feature.

Compact disc auto changer only—

Repeating a disc:
Push and hold ”RPT” until you hear a beep. ”D·RPT” will appear on the display. The player will repeat all the tracks on the disc you are listening to. When the disc ends, the player will automatically go back to the top track of the disc and replay. This process will be continued until you push the button again to turn off the repeat feature.

**SCAN**

**Radio**

You can either scan all the frequencies on a band or scan only the preset stations for that band.

To scan the preset stations:
Push and hold ”SCAN” until you hear a beep. The radio will tune in the next preset station up the band, stay there for a few seconds, and then move to the next preset station. To select a station, push ”SCAN” a second time.

To scan all the frequencies:
Quickly push and release ”SCAN”. If you hear a beep, you held the button too long, and the radio will scan the preset stations. The radio will find the next station up the station band, stay there for a few seconds, and then scan again. To select a station, push ”SCAN” a second time.

**Compact disc player**

There are two scan features—you can either scan the tracks on a specific disc or scan the first tracks of all the discs in the magazine.

Scanning for the tracks on a disc:
Quickly push and release ”SCAN”. ”SCAN” will appear on the display and the player will scan all the tracks on the disc you are listening to. If you hear a beep, you held the button too long, and the player will scan the first tracks of all the discs in the magazine. To select a track, push the ”SCAN” a second time. If the player scanned all the tracks on the disc, it will stop scanning.

Compact disc auto changer only—

Scanning for the first tracks of all the discs in the magazine:
Push and hold ”SCAN” until you hear a beep. ”D·SCAN” will appear on the display and the player will perform the first track of the next disc. To select a disc, push the ”SCAN” a second time. If the player has scanned all the discs, it will stop scanning.

**ST (Stereo reception) display**

Your radio automatically changes to stereo reception when a stereo broadcast is received. ”ST” appears on the display. If the signal becomes weak, the radio reduces the amount of channel separation to prevent the weak signal from creating noise. If the signal becomes extremely weak, the radio switches from stereo to mono reception.

**TRACK (Track up/down button): Compact disc player**

By using this button, you can skip up or down to a different track.

Push either side of the track button until the number of the track you want to listen to appears on the display. If you want to return to the beginning of the current track, push the down side of the button one time, quickly.

**TUNE (Tuning)**

**Tuning**

Your Toyota has an electronic tuning radio (ETR). Push and release the ”∧” (up) or ”∨” (down) side of ”TUNE” to step up or down the station band. (If you hear a beep, you held the button too long and the radio will go into the seek mode.)

**Seeking**

In the seek mode, the radio finds and plays the next station up or down the station band.

To seek a station, push and hold the ”∧” or ”∨” side of ”TUNE” until you hear a beep. Do this again to find another station.

## —Car audio system operating hints

**NOTICE**

***To ensure the correct audio system operation:***

- ***Be careful not to spill beverages over the audio system.***
- ***Do not put anything other than a cassette tape or Compact Disc into the slot.***

### RADIO RECEPTION

Usually, a problem with radio reception does not mean there is a problem with your radio—it is just the normal result of conditions outside the vehicle.

For example, nearby buildings and terrain can interfere with FM reception. Power lines or telephone wires can interfere with AM signals. And of course, radio signals have a limited range, and the farther you are from a station, the weaker its signal will be. In addition, reception conditions change constantly as your vehicle moves.

Here are some common reception problems that probably do not indicate a problem with your radio:

FM

Fading and drifting stations—Generally, the effective range of FM is about 40 km (25 miles). Once outside this range, you may notice fading and drifting, which increase with the distance from the radio transmitter. They are often accompanied by distortion.

Multi-path—FM signals are reflective, making it possible for two signals to reach your antenna at the same time. If this happens, the signals will cancel each other out, causing a momentary flutter or loss of reception.

Static and fluttering—These occur when signals are blocked by buildings, trees, or other large objects. Increasing the bass level may reduce static and fluttering.

Station swapping—If the FM signal you are listening to is interrupted or weakened, and there is another strong station nearby on the FM band, your radio may tune in the second station until the original signal can be picked up again.

AM

Fading—AM broadcasts are reflected by the upper atmosphere—especially at night. These reflected signals can interfere with those received directly from the radio station, causing the radio station to sound alternately strong and weak.

Station interference—When a reflected signal and a signal received directly from a radio station are very nearly the same frequency, they can interfere with each other, making it difficult to hear the broadcast.

Static—AM is easily affected by external sources of electrical noise, such as high tension power lines, lightening, or electrical motors. This results in static.

### CARING FOR YOUR CASSETTE PLAYER AND TAPES

For high performance from your cassette player and tapes:

Clean the tape head and other parts regularly.

- A dirty tape head or tape path can decrease sound quality and tangle your cassette tapes. The easiest way to clean them is by using a cleaning tape. (A wet type is recommended.)

Use high-quality cassettes.

- Low-quality cassette tapes can cause many problems, including poor sound, inconsistent playing speed, and constant auto-reversing. They can also get stuck or tangled in the cassette player.
- Do not use a cassette if it has been damaged or tangled or if its label is peeling off.
- Do not leave a cassette in the player if you are not listening to it, especially if it is hot outside.
- Store cassettes in their cases and out of direct sunlight.
- Avoid using cassettes with a total playing time longer than 100 minutes (50 minutes per side). The tape used in these cassettes is thin and could get stuck or tangled in the cassette player.

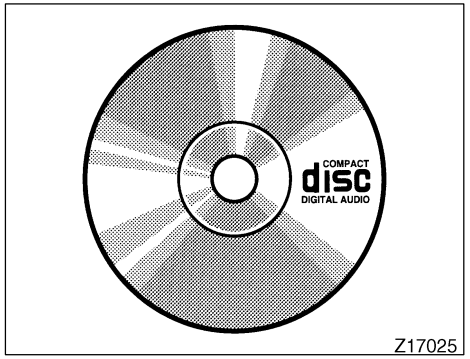


**CARING FOR YOUR COMPACT DISC PLAYER AND DISCS**

- Use only compact discs labeled as shown.
- Extremely high temperatures can keep your compact disc player from working. On hot days, use the air conditioning to cool the vehicle interior before you listen to a disc.
- Bumpy roads or other vibrations may make your compact disc player skip.
- If moisture gets into your compact disc player, you may not hear any sound even though your compact disc player appears to be working. Remove the disc from the player and wait until it dries.
- Handle compact discs carefully, especially when you are inserting them. Hold them on the edge and do not bend them. Avoid getting fingerprints on them, particularly on the shiny side.
- Dirt, scrapes, warping, pin holes, or other disc damage could cause the player to skip or to repeat a section of a track. (To see a pin hole, hold the disc up to the light.)
- Remove discs from the compact disc player when you are not listening to them. Store them in their plastic cases away from moisture, heat, and direct sunlight.

To clean a compact disc: Wipe it with a soft, lint-free cloth that has been dampened with water. Wipe in a straight line from the center to the edge of the disc (not in circles). Dry it with another soft, lint-free cloth. Do not use a conventional record cleaner or anti-static device.

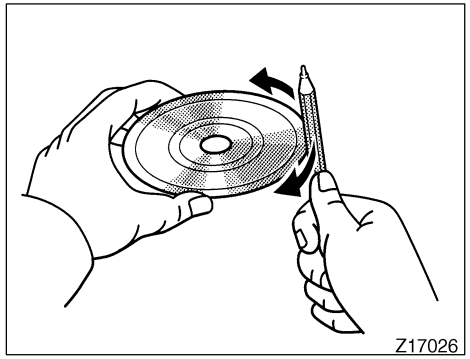


**A new disc may have rough edges on its inner and outer perimeter. Remove the rough edges by pressing the side of a ball-point pen or pencil against the inner and outer perimeter of the disc as shown.**

If you continue to play a disc with rough edges, flakes will fall on to the signal side of the disc and cause sound skipping or other problems.

**⚠ CAUTION**

**Compact disc players use invisible laser beam which could cause hazardous radiation exposure if directed outside the unit. Be sure to operate the player correctly as instructed.**

## Air conditioning system—
## —Controls

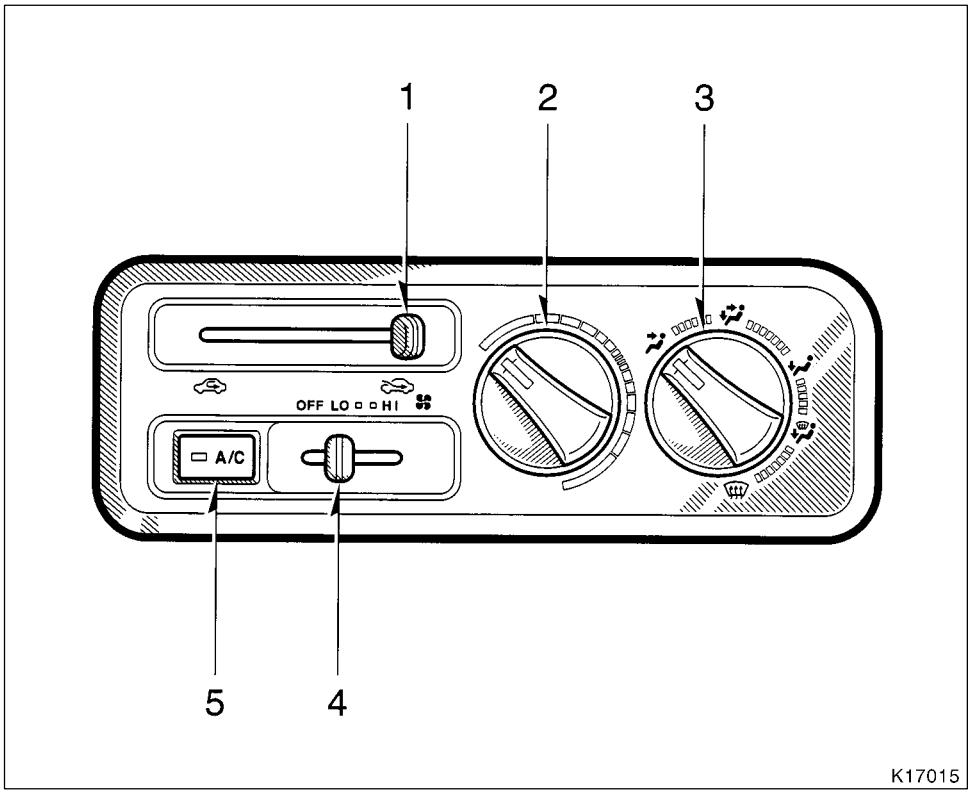


1. Air Intake Selector
2. Temperature Selector
3. Air Flow Selector
4. Fan Speed Selector
5. ”A/C” Button (on some models)

**Fan speed selector**

Move the lever to adjust the fan speed—to the right to increase, to the left to decrease.

**Temperature selector**

Turn the knob to adjust the temperature—to the right to warm, to the left to cool.

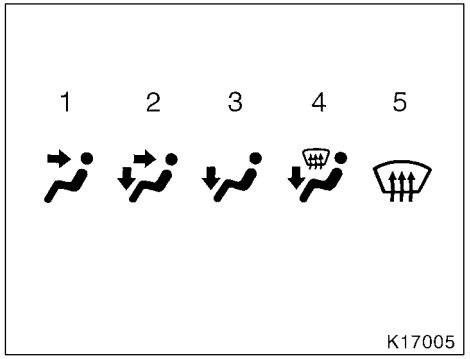


**Air flow selector**

Turn the knob to select the vents used for air flow.

1. **Panel—**Air flows mainly from the instrument panel vents.
2. **Bi- level—**Air flows from both the floor vents and the instrument panel vents.
3. **Floor—**Air flows mainly from the floor vents.
4. **Floor/Windshield—**Air flows mainly from the floor vents and windshield vents.
5. **Windshield—**Air flows mainly from the windshield vents.

For details about air flow selector settings, see the illustration after ”A/C” button.

Vehicles with ”A/C” button—

Turning the Air Flow Selector to windshield position turns on the front view more quickly.

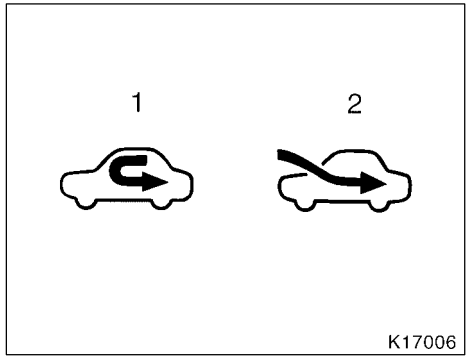


**Air intake selector**

Move the lever to select the air source.

1. **Recirculate—**Recirculates the air inside the vehicle.
2. **Fresh—**Draws outside air into the system.

**”A/C” button**

To turn on the air conditioning, press the ”A/C” button. The ”A/C” button indicator will come on. To turn the air conditioning off, press the button again.

If the ”A/C” button indicator flashes, there is a problem in the air conditioning system and the air conditioning automatically shuts off. If this happens, take your vehicle to a Toyota dealer for service.

## —Air flow selector settings

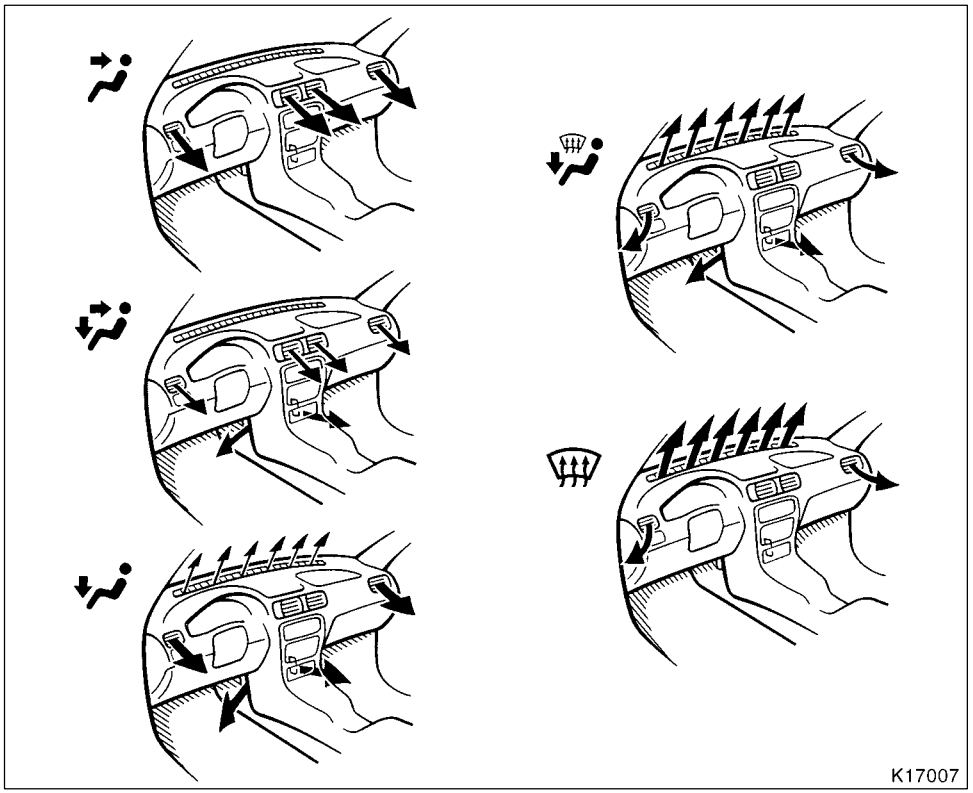


## —Operating tips

- To cool off your Toyota after it has been parked in the hot sun, drive with the windows open for a few minutes. This vents the hot air, allowing the air conditioning to cool the interior more quickly.
- Make sure the air intake grilles in front of the windshield are not blocked (by leaves or snow, for example).
- On humid days, do not blow cold air on the windshield. The windshield could fog up because of the difference in air temperature on the inside and outside of the windshield.
- Keep the area under the front seats clear to allow air to circulate throughout the vehicle.
- On cold days, move the fan speed to ”HI” for a minute to help clear the intake ducts of snow or moisture. This can reduce the amount of fogging on the windows.

**Heating**

For best results, set controls to:

**Fan speed—**Any setting except ”OFF”
**Temperature—**Towards **WARM** (red zone)
**Air intake—FRESH** (outside air)
**Air flow—FLOOR**
**Air conditioning—OFF**

- For quick heating, select recirculated air for a few minutes. To keep the windows from fogging, select fresh after the vehicle interior has been warmed.
- Press the ”A/C” button on for dehumidified heating.
- Choose floor/windshield air flow to heat the vehicle interior while defrosting or defogging the windshield.

**Air conditioning**

For best results, set controls to:

**Fan speed—**Any setting except ”OFF”
**Temperature—**Towards **COLD** (blue zone)
**Air intake—FRESH** (outside air)
**Air flow—PANEL**
**Air conditioning—ON**

- For quick cooling, move the air intake selector to recirculate for a few minutes.

**Ventilation**

For best results, set controls to:

**Fan speed—**Any setting except ”OFF”
**Temperature—**Towards **COLD** (blue zone)
**Air intake—FRESH** (outside air)
**Air flow—PANEL**
**Air conditioning—OFF**

**Defogging**

The inside of the windshield

For best results, set controls to:

**Fan speed—**Any setting except ”OFF”
**Temperature—**Towards **WARM** (red zone) to heat; **COLD** (blue zone) to cool
**Air intake—FRESH** (outside air)
**Air flow—WINDSHIELD**
**Air Conditioning—ON**

Vehicles with ”A/C” button—

Turning the Air Flow Selector to windshield position turns on the defroster to clear the front view more quickly.

Press the ”A/C” button for dehumidified heating or cooling. this setting clears the front view more quickly.

- On humid days, do not blow cold air on the windshield—the difference between the outside and inside temperatures could make the fogging worse.

**Defrosting**

The outside of the windshield

For best results, set controls to:

| |
|---|
| **Fan speed—**Any setting except ”OFF” |
| **Temperature—**Towards **WARM** (red zone) |
| **Air intake—FRESH** (outside air) |
| **Air flow—WINDSHIELD** |
| **Air conditioning—OFF** |

Vehicles with ”A/C” button—

Turning the Air Flow Selector to windshield position turns on the defroster to clear the front view more quickly.

Press the ”A/C” button for dehumidified heating or cooling. this setting clears the front view more quickly.

- To heat the vehicle interior while defrosting the windshield, choose floor/windshield air flow.

## —Side vents

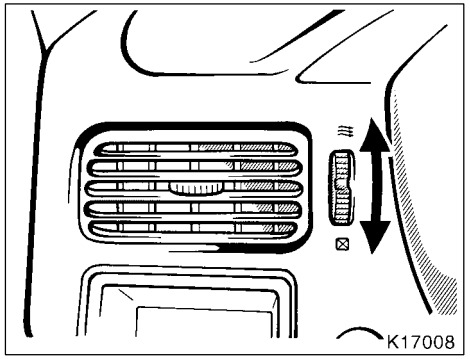


If air flow control is not satisfactory, check the side vents. The side vents may be opened or closed as shown.

# Part 1
# OPERATION OF INSTRUMENTS AND CONTROLS–

## Chapter 1- 8
## Other equipment


- Clock
- Cigarette lighter and ashtray
- Glove box
- Cup holder
- Floor mat


### Clock

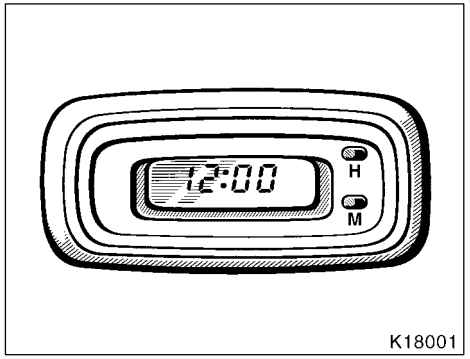


**The digital clock indicates the time.**

The key must be in the ”ACC” or ”ON” position.

To reset the hour: Push the ”H” button.
To reset the minutes: Push the ”M” button.

If the electrical power source has been disconnected from the clock, the time display will automatically be set to 1:00 (one o’clock).

When the instrument panel lights are turned on, the brightness of the time indication will be reduced.

### Cigarette lighter and ashtray

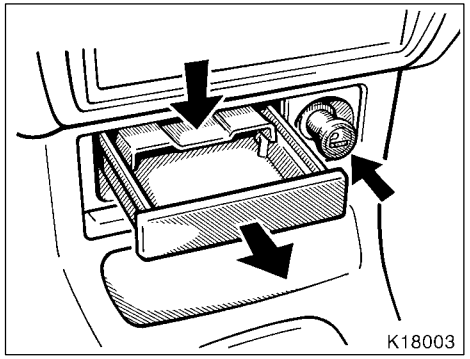


**CIGARETTE LIGHTER**

**To use the cigarette lighter, press it in. When it becomes heated, it automatically pops out ready for use.**

If the engine is not running, the key must be in the ”ACC” position.

Do not hold the cigarette lighter pressed in.

Use a Toyota genuine cigarette lighter or equivalent for replacement.

**ASHTRAY**

**To use the ashtray, pull it out.**

When finished with your cigarette, thoroughly extinguish it in the ashtray to prevent other cigarette butts from catching fire. After using the ashtray, push it back in completely.

To remove the ashtray, press down on the lock spring plate and pull out.

**⚠ CAUTION**

**To reduce the chance of injury in case of an accident or sudden stop while driving, always push the ashtray back in completely after using.**

## Glove box

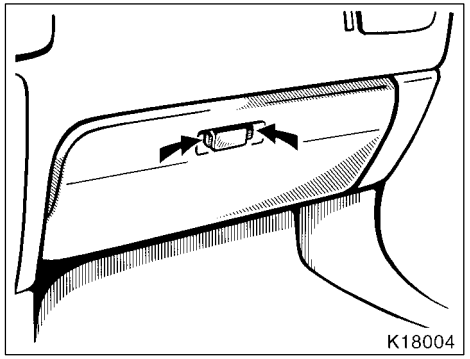


**To open the glove box door, compress the lock release buttons.**

**⚠ CAUTION**

**To reduce the chance of injury in case of an accident or a sudden stop, always keep the glove box door closed while driving.**

## Cup holder

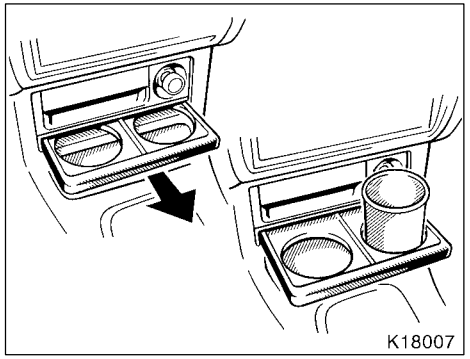


**The cup holder is designed for holding cups or drink-cans securely in its holes.**

To use the cup holder, pull it out.

**⚠ CAUTION**

- **Do not place anything else other than cups or drink-cans on the cup holder, as such item may be thrown about in the compartment and possibly injure people in the vehicle during sudden braking or an accident.**
- **To reduce the chance of injury in case of an accident or sudden stop while driving, keep the cup holder closed when it is not in use.**

## Floor mat

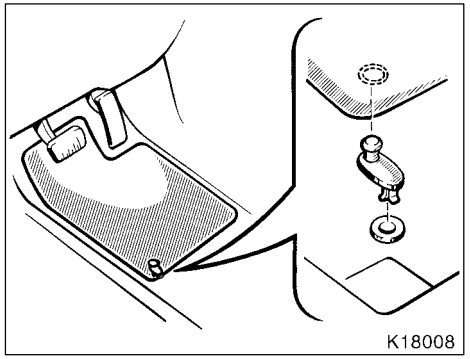


**Use a floor mat of the correct size.**

If the floor carpet and floor mat have a hole, then it is designed for use with a locking clip. Fix the floor mat with locking clip into the hole in the floor carpet.

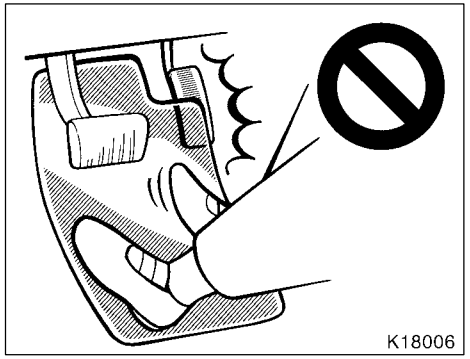


**⚠ CAUTION**

**Make sure the floor mat is properly placed on the floor carpet. If the floor mat slips and interferes with the movement of the pedals during driving, it may cause an accident.**

# Part 2 INFORMATION BEFORE DRIVING YOUR TOYOTA


- Break-in period
- Fuel
- Operation in foreign countries
- Three-way catalytic converter
- Engine exhaust cautions
- Facts about engine oil consumption
- Twin ground electrode spark plugs
- Brake system
- Brake pad wear limit indicators
- Luggage stowage precautions
- Your Toyota’s identification
- Theft prevention labels
- Suspension and chassis
- Types of tires


## Break-in period

**Drive gently and avoid high speeds.**

Your vehicle does not need an elaborate break-in. But following a few simple tips for the first 1600 km (1000 miles) can add to the future economy and long life of your vehicle:

- Do not drive over 88 km/h (55 mph).
- Run the engine at moderate speed between 2000 and 4000 rpm.
- Avoid full-throttle starts.
- Try to avoid hard stops during the first 300 km (200 miles).
- Do not drive slowly with the manual transmission in a high gear.
- Do not drive for a long time at any single speed, either fast or slow.

## Fuel

**FUEL TYPE**

**Your new vehicle must use only unleaded gasoline.**

To help prevent gas station mixups, your Toyota has a new smaller fuel tank opening. The special nozzle on pumps with unleaded fuel will fit it, but the larger standard nozzle on pumps with leaded gas will not.

At a minimum, the gasoline you use should meet the specifications of ASTM D4814 in the U.S.A. and CGSB 3.5-M93 in Canada.

***NOTICE***

***Do not use leaded gasoline. Use of leaded gasoline will cause the three-way catalytic converter to lose its effectiveness and the emission control system to function improperly. Also, this can increase maintenance costs.***

## OCTANE RATING

**Select Octane Rating 87 (Research Octane Number 91) or higher.**

Use of unleaded gasoline with an octane rating or research octane number lower than stated above will cause persistent heavy knocking. If it is severe, this will lead to engine damage.

**If your engine knocks...**

If you detect heavy knocking even when using the recommended fuel, or if you hear steady knocking while holding a steady speed on level roads, consult your Toyota dealer.

However, now and then, you may notice light knocking for a short time while accelerating or driving up hills. This is no need of concern.

## GASOLINES CONTAINING DETERGENT ADDITIVES

**Toyota recommends use of gasolines that contain detergent additives to avoid build-up of engine deposits.**

For further details, ask your Toyota dealer or a local gasoline retailer.

## IMPROVED GASOLINES

**The American Automobile Manufacturers Association (AAMA) has developed a specification of improved gasolines. The AAMA specification offers optimal fuel information for better vehicle performance and better protection of your engine.**

Toyota recommends the use of gasolines that meet the AAMA specification, if available, for improved driveability and emission control system.

## GASOLINES CONTAINING MTBE

**Gasolines that contain MTBE (Methyl Tertiary-Butyl Ether) are available in the market. If you use a gasoline mixed with MTBE, make certain that it does not contain more than 15% of MTBE.**

## GASOLINES CONTAINING MMT

**Some gasolines contain an octane-enhancing additive called MMT (methylcyclopentadienyl manganese tricarbonyl).**

Toyota does not recommend the use of gasolines that contain MMT. If fuels containing MMT are used, your emission control system may be adversely affected. The Malfunction Indicator Lamp on the instrument cluster may come on. If this happens, contact your Toyota dealer for service.

## GASOLINES CONTAINING ALCOHOL

**If you use gasohol in your Toyota, be sure that it is unleaded, has an octane rating no lower than 87 and does not contain more than 10% ethanol.**

Gasohol is a mixture of gasoline and ethanol.

Toyota does not recommend the use of gasolines containing methanol. If you use gasoline containing methanol, use only gasoline meeting the requirements above and also containing less than 5% methanol with cosolvents and corrosion inhibitors for methanol.

**GASOLINES QUALITY**

In a very few cases, you may experience driveability problems caused by the particular gasoline that you are using. If you continue to have unacceptable driveability, try changing gasoline brands. If that does not rectify your problem, then consult your Toyota dealer.

***NOTICE***

- ***Do not use gasohol other than stated above. It will cause fuel system damage or vehicle performance problems.***
- ***If driveability problems occur (poor hot starting, vaporizing, engine knock, etc.), discontinue the use.***
- ***Take care not to spill gasohol during refueling. Gasohol may cause paint damage.***

**FUEL TANK CAPACITY**

45 L (11.9 gal., 9.9 Imp. gal.)

## Operation in foreign countries

**If you plan to drive your Toyota in another country...**

**First,** comply with the vehicle registration laws.

**Second,** confirm the availability of the correct fuel (unleaded and minimum octane number).

## Three-way catalytic converter

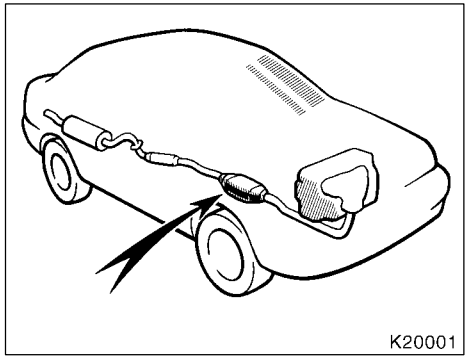


**The three-way catalytic converter is an emission control device installed in the exhaust system.**

The purpose is to reduce pollutants in the exhaust gas.

**⚠ CAUTION**

- **Keep people and combustible materials away from the exhaust pipe while the engine is running. The exhaust gas is very hot.**
- **Do not drive, idle or park your vehicle over anything that might burn easily such as grass, leaves, paper or rags.**

**NOTICE**

*A large amount of unburned gases flowing into the three-way catalytic converter may cause it to overheat and create a fire hazard. To prevent this and other damage, observe the following precautions:*

- *Use only unleaded gasoline.*
- *Do not drive with an extremely low fuel level; running out of fuel could cause the engine to misfire, creating an excessive load on the three-way catalytic converter.*
- *Do not allow the engine to run at idle speed for more than 20 minutes.*
- *Avoid racing the engine.*
- *Do not push-start or pull-start your vehicle.*
- *Do not turn off the ignition while the vehicle is moving.*
- *Keep your engine in good running order. Malfunctions in the engine electrical system, electronic ignition system/distributor ignition system or fuel systems could cause an extremely high three-way catalytic converter temperature.*
- *If the engine becomes difficult to start or stalls frequently, take your vehicle in for a check-up as soon as possible. Remember, your Toyota dealer knows your vehicle and its three-way catalytic converter system best.*
- *To ensure that the three-way catalytic converter and the entire emission control system operate properly, your vehicle must receive the periodic inspections required by the Toyota Maintenance Schedule. For schedule maintenance information, refer to the separate ”Scheduled Maintenance Guide” or ”Owner’s Manual Supplement”.*

## Engine exhaust cautions

**⚠ CAUTION**

- **Avoid inhaling the engine exhaust. It contains carbon monoxide, which is a colorless and odorless gas. It can cause unconsciousness or even death.**
- **Make sure the exhaust system has no holes or loose connections. The system should be checked from time to time. If you hit something, or notice a change in the sound of the exhaust, have the system checked immediately.**
- **Do not run the engine in a garage or enclosed area except for the time needed to drive the vehicle in or out. The exhaust gases cannot escape, making this a particularly dangerous situation.**
- **Do not remain for a long time in a parked vehicle with the engine running. If it is unavoidable, however, do so only in an unconfined area and adjust the heating or cooling system to force outside air into the vehicle.**

- **Keep the trunk lid closed while driving. An open or unsealed trunk lid may cause exhaust gases to be drawn into the vehicle.**
- **To allow proper operation of your vehicle’s ventilation system, keep the inlet grilles in front of the windshield clear of snow, leaves, or other obstructions.**
- **If you smell exhaust fumes in the vehicle, drive with the windows open and the trunk lid closed. Have the cause immediately located and corrected.**

## Facts about engine oil consumption

### FUNCTIONS OF ENGINE OIL

Engine oil has the primary functions of lubricating and cooling the inside of the engine, and plays a major role in maintaining the engine in proper working order.

### ENGINE OIL CONSUMPTION

**It is normal that an engine should consume some engine oil during normal engine operation. The causes of oil consumption in a normal engine are as follows.**

- Oil is used to lubricate pistons, piston rings and cylinders. A thin film of oil is left on the cylinder wall when a piston moves downwards in the cylinder. High negative pressure generated when the vehicle is decelerating sucks some of this oil into the combustion chamber. This oil as well as some part of the oil film left on the cylinder wall is burned by the high temperature combustion gases during the combustion process.
- Oil is also used to lubricate the stems of the intake valves. Some of this oil is sucked into the combustion chamber together with the intake air and is burned along with the fuel. High temperature exhaust gases also burn the oil used to lubricate the exhaust valve stems.

**The amount of engine oil consumed depends on the viscosity of the oil, the quality of the oil and the conditions the vehicle is driven under.**

More oil is consumed by high-speed driving and frequent acceleration and deceleration.

A new engine consumes more oil, since its pistons, piston rings and cylinder walls have not become conditioned.

**When judging the amount of oil consumption, note that the oil may become diluted and make it difficult to judge the true level accurately.**

As an example, if a vehicle is used for repeated short trips, and consumes a normal amount of oil, the dipstick may not show any drop in the oil level at all, even after 1000 km (600 miles) or more. This is because the oil is gradually becoming diluted with fuel or moisture, making it appear that the oil level has not changed.

The diluting ingredients evaporate out when the vehicle is then driven at high speeds, as on an expressway, making it appear that oil is excessively consumed after driving at high speeds.

**IMPORTANCE OF ENGINE OIL LEVEL CHECK**

One of the most important points in proper vehicle maintenance is to keep the engine oil at the optimum level so that oil function will not be impaired. Therefore, it is essential that the oil level be checked regularly. Toyota recommends that the oil level be checked every time you refuel the vehicle.

***NOTICE***

***Failure to check the oil level regularly could lead to serious engine trouble due to insufficient oil.***

For detailed information on oil level check, see ”Checking the engine oil level” in Chapter 7-2.

## Twin ground electrode spark plugs

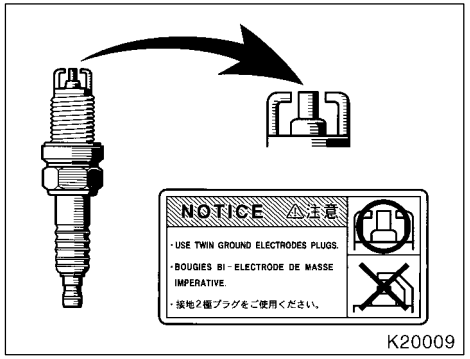


**Your engine is fitted with twin ground electrode spark plugs.**

***NOTICE***

***Use only twin ground electrode spark plugs for your engine performance.***

## Brake system

**TANDEM MASTER CYLINDER BRAKE SYSTEM**

The tandem master cylinder brake system is a hydraulic system with two separate sub-systems. If either sub-system should fail, the other will still work. However, the pedal will be harder to press, and your stopping distance will be longer. Also, the brake system warning light may come on.

**⚠ CAUTION**

**Do not drive your vehicle with only a single brake system. Have your brakes fixed immediately.**

**BRAKE BOOSTER**

The brake booster uses engine vacuum to power-assist the brakes. If the engine should quit while you are driving, you can bring the vehicle to a stop with normal pedal pressure. There is enough reserve vacuum for one or two stops—but no more!

**⚠ CAUTION**

- **Do not pump the brake pedal if the engine stalls. Each push on the pedal uses up your vacuum reserve.**
- **Even if the power assist is completely lost, the brakes will still work. But you will have to push the pedal hard—much harder than normal. And your braking distance will be longer.**

**ANTI-LOCK BRAKE SYSTEM (with ”ABS” warning light)**

The anti-lock brake system is designed to automatically help prevent lock-up of the wheels during sudden braking or braking on slippery road surfaces. This assists in providing directional stability and steering performance of the vehicle under these circumstances.

The anti-lock brake system becomes operative after the vehicle has accelerated to a speed in excess of approximately 10 km/h (6 mph). It stops operating when the vehicle decelerates to a speed below approximately 5 km/h (3 mph).

You may hear a sound in the engine compartment for a few seconds when the engine is started or just after the vehicle is started. This means that the anti-lock brake system is in the self check mode, and does not indicate a malfunction.

Effective way to press the ”ABS” brake pedal: When the anti-lock brake system function is in action, you may feel the brake pedal pulsating and hear a noise. In this situation, to let the anti-lock brake system work for you, just hold the brake pedal down more firmly. Do not pump the brake in a panic stop. Pumping the brake pedal makes the stopping distance longer.

The brake pedal pulsation caused by the anti-lock brake system may indicate hazardous road surface conditions. Although the anti-lock brake system assists in providing vehicle control, it is still important to drive with all due care, because the anti-lock brake system cannot overcome the laws of physics that act on your vehicle:

- Braking capability is dependent on tire friction with the road surface.
- Even though the anti-lock brake system is operating, a driver cannot maintain full control on certain slippery road surfaces, when cornering at high speeds, or in violent maneuvers.
- Avoid high speeds on wet roads. The anti-lock brake system cannot eliminate the risk of hydroplaning and loss of tire friction.

Always maintain a safe distance from the vehicle in front of you. Compared with vehicles not fitted with an anti-lock brake system, your vehicle may require a longer stopping distance in the following cases:

- Driving on rough, gravel or snow-covered roads.
- Driving with tire chains installed.
- Driving on roads where the road surface is pitted or has other differences in surface height.

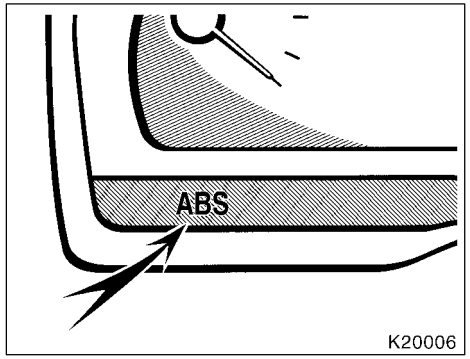


**Type A**

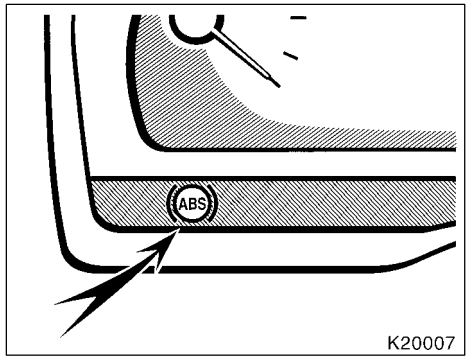


**Type B**

**”ABS” warning light**

This light comes on when the ignition key is turned to the ”ON” position. After about a few seconds, the light will go off.

If either of the following conditions occurs, this indicates a malfunction somewhere in the parts monitored by the warning light system. Contact your Toyota dealer as soon as possible to service the vehicle.

- The light does not come on as described above, or remains on.
- The light comes on while driving.

Even if the anti-lock brake system should fail, the brake system will still operate conventionally. However, when the ”ABS” warning light is on (and the brake system warning light is off), the anti-lock brake system is not assisting brake performance so that the wheels can lock-up during sudden braking or braking on slippery road surfaces. Have your vehicle checked by your Toyota dealer as soon as possible.

## Brake pad wear limit indicators

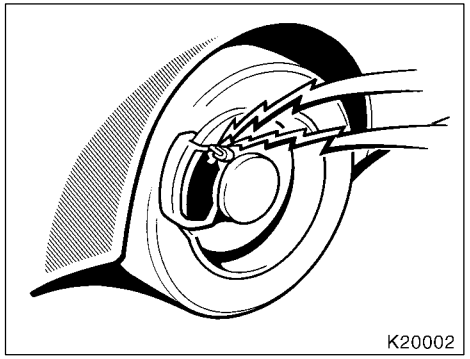


**The brake pad wear limit indicators on your disc brakes give a warning noise when the brake pads are worn to where replacement is required.**

If you hear a squealing or scraping noise while driving, have the brake pads checked and replaced by your Toyota dealer as soon as possible. Expensive rotor damage can result if the pads are not replaced when necessary.

## Luggage stowage precautions

When stowing luggage or cargo in the vehicle, observe the following:

- Put luggage or cargo in the trunk when at all possible. Be sure all items are secured in place.
- Be careful to keep the vehicle balanced. Locating the weight as far forward as possible helps maintain this.
- For better fuel economy, do not carry unneeded weight.

**⚠ CAUTION**

- **To prevent luggage or packages from sliding forward during braking, do not stack anything in the enlarged trunk. Keep luggage or package low, as close to the floor as possible.**
- **Never allow anyone to ride in the enlarged trunk. It is not designed for passengers. They should ride in their seats with their seat belts properly fastened. Otherwise, they are much more likely to suffer serious bodily injury, in the event of sudden braking or a collision.**

- **Do not place anything on the filler panel behind the rear seatback. Such items may be thrown about and possibly injure people in the vehicle during sudden braking or an accident.**
- **Do not drive with objects left on top of the instrument panel. They may interfere with the driver’s field of view. Or they may move during sharp vehicle acceleration or turning, and impair the driver’s control of the vehicle. In an accident they may injure the vehicle occupants.**

***NOTICE***

***Do not load the vehicle beyond the vehicle capacity weight specified in Part 8.***

## Your Toyota’s identification——Vehicle identification number

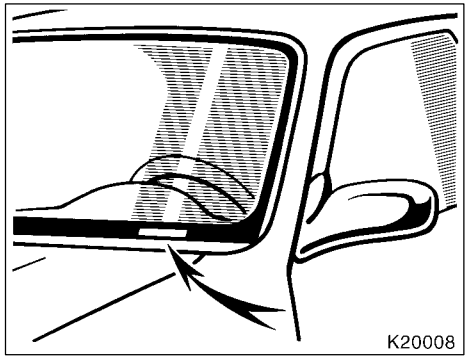


**The vehicle identification number (VIN) is the legal identifier for your vehicle. This number is on the left top of the instrument panel, and can be seen through the windshield from outside.**

This is the primary identification number for your Toyota. It is used in registering the ownership of your vehicle.

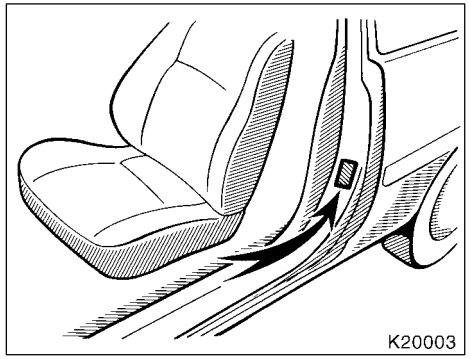


The vehicle identification number (VIN) is also on the Certification Label.

## —Engine number

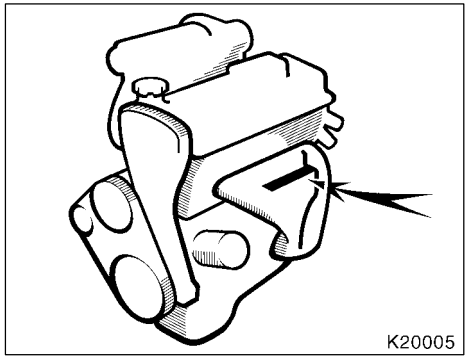


**The engine number is stamped on the engine block as shown.**

## Theft prevention labels (except for Canada)

**Your new vehicle carries theft prevention labels which are approximately 56 mm (2.20 in.) by 16 mm (0.63 in.).**

The purpose of these labels is to reduce the incidence of vehicle thefts by facilitating the tracing and recovery of parts from stolen vehicles. The label is designed so that once it is applied to a surface, any attempt to remove it will result in destroying the integrity of the label. Transferring these labels intact from one part to another, will be impossible.

| ***NOTICE*** |
| --- |
| ***You should not attempt to remove the theft prevention labels as it may violate certain state or federal laws.*** |

## Suspension and chassis

**⚠ CAUTION**

**Do not modify the suspension/chassis with lift kits, spacers, springs, etc. It can cause dangerous handling characteristics, resulting in loss of control.**

## Types of tires

**Determine what kind of tires your vehicle is originally equipped with.**

**1. Summer tires**

Summer tires are high-speed capability tires best suited to highway driving under dry conditions.

Since summer tires do not have the same traction performance as snow tires, summer tires are inadequate for driving on snow-covered or icy roads. For driving on snow-covered or icy roads, we recommend using snow tires. If installing snow tires, be sure to replace all four tires.

**2. All season tires**

All season tires are designed to provide better traction in snow and to be adequate for driving in most winter conditions, as well as for use all year round.

All season tires, however, do not have adequate traction performance compared with snow tires in heavy or loose snow. Also, all season tires fall short in acceleration and handling performance compared with summer tires in highway driving.

**⚠ CAUTION**

- **Do not mix summer and all season tires on your vehicle as this can cause dangerous handling characteristics, resulting in loss of control.**
- **Do not use tires other than the manufacturer’s designated tires, and do not mix tires or wheels of the sizes different from the originally equipped tires and wheels.**

# Part 3
# STARTING AND DRIVING


- Before starting the engine
- How to start the engine
- Tips for driving in various conditions
- Winter driving tips
- Trailer towing
- How to save fuel and make your vehicle last longer, too


## Before starting the engine

1. Check the area around the vehicle before entering it.
2. Adjust seat position and seatback angle.
3. Adjust inside and outside rear view mirrors.
4. Lock all doors.
5. Fasten seat belts.

## How to start the engine—(a) Before cranking

1. Apply the parking brake firmly.
2. Turn off unnecessary lights and accessories.
3. **Manual transmission:** Press the clutch pedal to the floor and shift the transmission into neutral. Hold the clutch pedal to the floor until the engine is started. A starter safety device will prevent the starter from operating if the clutch pedal is not fully depressed.

   **Automatic transmission:** Put the selector lever in ”P”. If you need to restart the engine while the vehicle is moving, put the selector lever in ”N”. A starter safety device will prevent the starter from operating if the selector lever is in any drive position.
4. **Automatic transmission only:** Depress the brake pedal and hold it to the floor until driving off.

## (b) Starting the engine

Before starting the engine, be sure to follow the instructions in ”(a) Before cranking”.

**Normal starting procedure**

The multiport fuel injection system/sequential multiport fuel injection system in your engine automatically controls the proper air-fuel mixture for starting. You can start a cold or hot engine as follows:

1. With your foot off the accelerator pedal, crank the engine by turning the key to ”START”. Release it when the engine starts.
2. After the engine runs for about 10 seconds, you are ready to drive.

If the weather is below freezing, let the engine warm up for a few minutes before driving.

**If the engine stalls...**

Simply restart it, using the correct procedure given in normal starting.

**If the engine will not start...**

See ”If your vehicle will not start” in Part 4.

***NOTICE***

- ***Do not crank for more than 30 seconds at a time. This may overheat the starter and wiring systems.***
- ***Do not race a cold engine.***
- ***If the engine becomes difficult to start or stalls frequently, have the engine checked immediately.***

## Tips for driving in various conditions

- Always slow down in gusty crosswinds. This will allow you much better control.
- Drive slowly onto curbs and, if possible, at a right angle. Avoid driving onto high, sharp-edged objects and other road hazards. Failure to do so can lead to severe tire damage resulting in tire bursts.
- When parking on a hill, turn the front wheels until they touch the curb so that the vehicle will not roll. Apply the parking brake, and place the transmission in ”P” (automatic) or in first or reverse (manual). If necessary, block the wheels.
- Washing your vehicle or driving through deep water may get the brakes wet. To see whether they are wet, check that there is no traffic near you, and then press the pedal lightly. If you do not feel a normal braking force, the brakes are probably wet. To dry them, drive the vehicle cautiously while lightly pressing the brake pedal with the parking brake pulled. If they still do not work safely, pull to the side of the road and call a Toyota dealer for assistance.

**⚠ CAUTION**

- **Before driving off, make sure that the parking brake is fully released and the parking brake reminder light is off.**
- **Do not leave your vehicle unattended while the engine is running.**
- **Do not rest your foot on the brake pedal while driving. It can cause dangerous overheating, needless wear, and poor fuel economy.**
- **To drive down a long or steep hill, reduce your speed and downshift. Remember, if you ride the brakes excessively, they may overheat and not work properly.**
- **Be careful when accelerating, upshifting, downshifting or braking on a slippery surface. Sudden acceleration or engine braking, could cause the vehicle to spin or skid.**

- **Do not drive in excess of the speed limit. Even if the legal speed limit permits it, do not drive over 140 km/h (85 mph) unless your vehicle has high-speed capability tires. Driving over 140 km/h (85 mph) may result in tire failure, loss of control and possible injury. Be sure to consult a tire dealer to determine whether the tires on your vehicle are high-speed capability tires or not before driving at such speeds.**
- **Do not continue normal driving when the brakes are wet. If they are wet, your vehicle will require a longer stopping distance, and it may pull to one side when the brakes are applied. Also, the parking brake will not hold the vehicle securely.**

## Winter driving tips

**Make sure you have a proper freeze protection of engine coolant.**

Your coolant must contain ethylene-glycol type coolant for a proper corrosion protection of aluminum components. Use ”Toyota Long Life Coolant” or equivalent.

See Chapter 7-2 for details about coolant type selection.

***NOTICE***

***Do not use alcohol type antifreeze or plain water alone.***

When it is extremely cold, we recommend to use 60% solution for your Toyota, to provide protection down to about -50°C (-58°F). Do not use more than 70% solution for better coolant performance.

**Check the condition of the battery and cables.**

Cold temperatures reduce the capacity of any battery, so it must be in top shape to provide enough power for winter starting. Chapter 7-3 tells you how to visually inspect the battery. Your Toyota dealer and most service stations will be pleased to check the level of charge.

**Make sure the engine oil viscosity is suitable for the cold weather.**

See Chapter 7-2 for recommended viscosity. Leaving a heavy summer oil in your vehicle during winter months may cause harder starting. If you are not sure about which oil to use, call your Toyota dealer–he will be pleased to help.

**Keep the door locks from freezing.**

Squirt lock de-icer or glycerine into the locks to keep them from freezing. To open a frozen lock, try heating the key before inserting it.

**Use a washer fluid containing an antifreeze solution.**

This product is available at your Toyota dealer and most auto parts stores. Follow the manufacturer’s directions for how much to mix with water.

***NOTICE***

***Do not use engine antifreeze or any other substitute because it may damage your vehicle’s paint.***

**Do not use your parking brake when there is a possibility it could freeze.**

When parking, put the transmission into ”P” (automatic) or into first or reverse (manual) and block the rear wheels. Do not use the parking brake, or snow or water accumulated in and around the parking brake mechanism may freeze, making it hard to release.

**Keep ice and snow from accumulating under the fenders.**

Ice and snow built up under your fenders can make steering difficult. During bad winter driving, stop and check under the fenders occasionally.

**Depending on where you are driving, we recommend you carry some emergency equipment.**

Some of the things you might put in the vehicle are tire chains, window scraper, bag of sand or salt, flares, small shovel, jumper cables, etc.

## Trailer towing

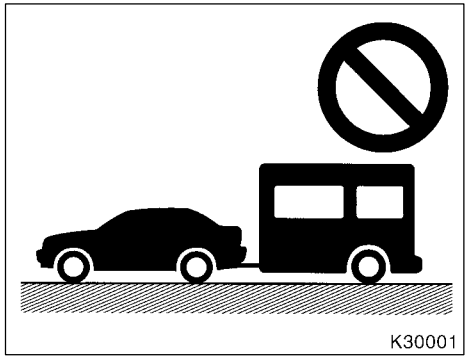


Toyota does not recommend towing a trailer with your Tercel. It is not designed for trailer towing.

## How to save fuel and make your vehicle last longer, too

Getting more kilometers/mileage from a liter/gallon of fuel is easy—just take it easy. It will help make your vehicle last longer, too. Here are some specific tips on how to save money on both fuel and repairs:

- **Keep your tires inflated at the correct pressure.** Underinflation causes tire wear and wastes fuel. See Chapter 7-2 for instructions.
- **Do not carry unneeded weight in your vehicle.** Excess weight puts a heavier load on the engine, causing greater fuel consumption.
- **Avoid lengthy warm-up idling.** Once the engine is running smoothly, begin driving–but gently. Remember, however, that on cold winter days this may take a little longer.
- **Accelerate slowly and smoothly.** Avoid jackrabbit starts. Get into high gear as quickly as possible.
- **Avoid long engine idling.** If you have a long wait and you are not in traffic, it is better to turn off the engine and start again later.
- **Avoid engine lug or overrevving.** Use a gear position suitable for the road on which you are travelling.
- **Avoid continuous speeding up and slowing down.** Stop-and-go driving wastes fuel.
- **Avoid unnecessary stopping and braking.** Maintain a steady pace. Try to time the traffic signals so you only need to stop as little as possible or take advantage of through streets to avoid traffic lights. Keep a proper distance from other vehicles to avoid sudden braking. This will also reduce wear on your brakes.
- **Avoid heavy traffic or traffic jams whenever possible.**
- **Do not rest your foot on the clutch or brake pedal.** This causes needless wear, overheating and poor fuel economy.
- **Maintain a moderate speed on highways.** The faster you drive, the greater the fuel consumption. By reducing your speed, you will cut down on fuel consumption.
- **Keep the front wheels in proper alignment.** Avoid hitting the curb and slow down on rough roads. Improper alignment not only causes faster tire wear but also puts an extra load on the engine, which, in turn, wastes fuel.
- **Keep the bottom of your vehicle free from mud, etc.** This not only lessens weight but also helps prevent corrosion.
- **Keep your vehicle tuned-up and in top shape.** A dirty air cleaner, improper valve clearance, dirty plugs, dirty oil and grease, brakes not adjusted, etc. all lower engine performance and contribute to poor fuel economy. For longer life of all parts and lower operating costs, keep all maintenance work on schedule, and if you often drive under severe conditions, see that your vehicle receives more frequent maintenance (For schedule maintenance information, please refer to the separate ”Scheduled Maintenance Guide” or ”Owner’s Manual Supplement”).

**⚠ CAUTION**

**Never turn off the engine to coast down hills. Your power steering and brake booster will not function without the engine running. Also, the emission control system operates properly only when the engine is running.**

# Part 4
# IN CASE OF AN EMERGENCY


- If your vehicle will not start
- If your engine stalls while driving
- If your vehicle overheats
- If you have a flat tire
- If your vehicle needs to be towed
- If you cannot shift automatic transmission selector lever
- If you lose your keys


## If your vehicle will not start—
## (a) Simple checks

Before making these checks, make sure you have followed the correct starting procedure given in ”How to start the engine” in Part 3 and that you have sufficient fuel.

**If the engine is not turning over or is turning over too slowly—**

1. Check that the battery terminals are tight and clean.
2. If the battery terminals are O.K., switch on the interior light.
3. If the light is out, dim or goes out when the starter is cranked, the battery is discharged. You may try jump starting. See ”(c) Jump starting” for further instructions.

If the light is O.K., but the engine still will not start, it needs adjustment or repair. Call a Toyota dealer or qualified repair shop.

| ***NOTICE*** |
| --- |
| ***Do not pull- or push-start the vehicle. It may damage the vehicle or cause a collision when the engine starts. Also the three-way catalytic converter may overheat and become a fire hazard.*** |

**If the engine turns over at its normal speed but will not start—**

1. Check that all the push-on connectors are tight. (For example, connections at the spark plugs, ignition coil and/or distributor)
2. If the connectors are O.K., the engine may be flooded because of repeated cranking. See ”(b) Starting a flooded engine” for further instructions.

## (b) Starting a flooded engine

**If the engine will not start, your engine may be flooded because of repeated cranking.**

If this happens, turn the key to ”START” with the accelerator pedal held down. Keep the key and accelerator pedal so for 15 seconds and release them. Then try starting the engine with your foot off the accelerator pedal.

If the engine does not start after 15 seconds of cranking, release the key, wait a few minutes and try again.

If the engine still will not start, it needs adjustment or repair. Call a Toyota dealer or qualified repair shop for assistance.

***NOTICE***

***Do not crank for more than 30 seconds at a time. This may overheat the starter and wiring systems.***

## (c) Jump starting

**To avoid serious personal injury and damage to your vehicle which might result from battery explosion, acid burns, electrical burns, or damaged electronic components, these instructions must be followed precisely.**

If you are unsure about how to follow this procedure, we strongly recommend that you seek the help of a competent mechanic or towing service.

**⚠ CAUTION**

- **Batteries contain sulfuric acid which is poisonous and corrosive. Wear protective safety glasses when jump starting, and avoid spilling acid on your skin, clothing, or vehicle.**
- **If you should accidentally get acid on yourself or in your eyes, remove any contaminated clothing and flush the affected area with water immediately. Then get immediate medical attention. If possible, continue to apply water with a sponge or cloth while enroute to the medical office.**
- **The gas normally produced by a battery will explode if a flame or spark is brought near. Use only standardized jumper cables and do not smoke or light a match while jump starting.**

***NOTICE***

***The battery used for boosting must be 12 V. Do not jump start unless you are sure that the booster battery is correct.***

**JUMP STARTING PROCEDURE**

1. If the booster battery is installed in another vehicle, make sure the vehicles are not touching. Turn off all unnecessary lights and accessories.
2. If required, remove all the vent plugs from the booster and discharged batteries. Lay a cloth over the open vents on the batteries. (This helps reduce the explosion hazard, personal injuries and burns.)
3. If the engine in the vehicle with the booster battery is not running, start it and let it run for a few minutes. During jump starting, run the engine at about 2000 rpm with the accelerator pedal lightly depressed.

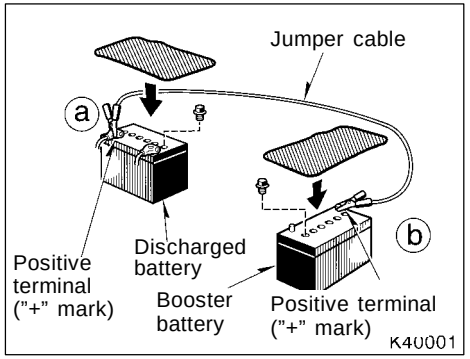


4. Make the cable connections in the order a, b, c, d.

   a. Connect the clamp of the positive (red) jumper cable to the positive (+) terminal on the discharged battery.

   b. Connect the clamp at the other end of the positive (red) jumper cable to the positive (+) terminal on the booster battery.

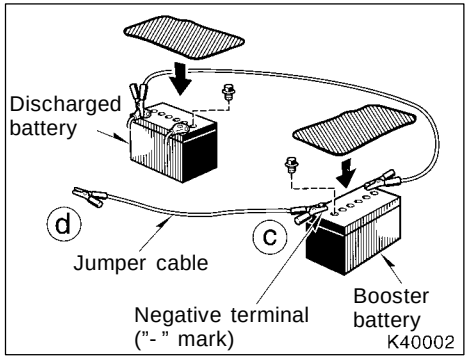


   c. Connect the clamp of the negative (black) jumper cable to the negative (-) terminal on the booster battery.

   d. Connect the clamp at the other end of the negative (black) jumper cable to a solid, stationary, unpainted, metallic point of the vehicle with the discharged battery.

   The recommended connecting point is shown in the following illustration:

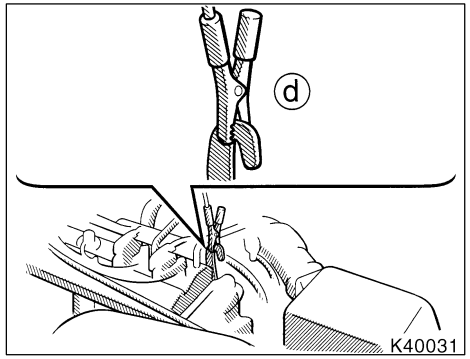


**Connecting point**

Do not connect it to or near any part that moves when the engine is cranked.

**⚠ CAUTION**

**When making the connections, to avoid serious injury, do not lean over the battery or accidentally let the jumper cables or clamps touch anything except the correct battery terminals or the ground.**

5. Start your engine in the normal way. After starting, run it at about 2000 rpm for several minutes with the accelerator pedal lightly depressed.
6. Carefully disconnect the cables in the exact reverse order: the negative cable and then the positive cable.
7. Carefully dispose of the battery cover cloths—they may now contain sulfuric acid.
8. If removed, replace all the battery vent plugs.

If the cause of your battery discharging is not apparent (for example, lights left on), you should have it checked.

## If your engine stalls while driving

If your engine stalls while driving...

1. Reduce your speed gradually, keeping a straight line. Move cautiously off the road to a safe place.
2. Turn on your emergency flashers.
3. Try starting the engine again.

If the engine will not start, see ”If your vehicle will not start”.

**⚠ CAUTION**

**If the engine is not running, the power assist for the brakes and steering will not work so steering and braking will be much harder than usual.**

## If your vehicle overheats

**If your engine coolant temperature gauge indicates overheating, if you experience a loss of power, or if you hear a loud knocking or pinging noise, the engine has probably overheated. You should follow this procedure...**

1. Pull safely off the road, stop the vehicle and turn on your emergency flashers. Put the transmission in ”P” (automatic) or neutral (manual) and apply the parking brake. Turn off the air conditioning if it is being used.
2. If coolant or steam is boiling out of the radiator or reservoir,stop the engine. Wait until the steam subsides before opening the hood. If there is no coolant boiling over or steam, leave the engine running and make sure the electric cooling fan is operating. If it is not, turn the ignition off.

**⚠ CAUTION**

**To help avoid personal injury, keep the hood closed until there is no steam. Escaping steam or coolant is a sign of very high pressure.**

3. Visually check to see if the engine drive belt (water pump belt) is broken or loose. Look for obvious coolant leaks from the radiator, hoses, and under the vehicle. However, note that water draining from the air conditioning is normal if it has been used.

**⚠ CAUTION**

**When the engine is running, keep hands and clothing away from the moving fan and engine drive belts.**

4. If the engine drive belt is broken or coolant is leaking, stop the engine immediately. Call a Toyota dealer for assistance.
5. If the engine drive belt is O.K. and there are no obvious leaks, check the coolant reservoir. If it is dry, add coolant to the reservoir while the engine is running. Fill it about half full.

**⚠ CAUTION**

**Do not attempt to remove the radiator cap when the engine and radiator are hot. Serious injury could result from scalding hot fluid and steam blown out under pressure.**

6. After the engine coolant temperature has cooled to normal, again check the coolant level in the reservoir. If necessary, bring it up to half full again. Serious coolant loss indicates a leak in the system. You should have it checked as soon as possible at your Toyota dealer.

## If you have a flat tire—

1. Reduce your speed gradually, keeping a straight line. Move cautiously off the road to a safe place well away from the traffic. Avoid stopping on the center divider of a highway. Park on a level spot with firm ground.
2. Stop the engine and turn on your emergency flashers.
3. Firmly set the parking brake and put the transmission in ”P” (automatic) or reverse (manual).
4. Have everyone get out of the vehicle on the side away from traffic.
5. Read the following instructions thoroughly.

**⚠ CAUTION**

**When jacking, be sure to observe the following to reduce the possibility of personal injury:**

- **Follow jacking instructions.**
- **Do not start or run the engine while your vehicle is supported by the jack.**
- **Stop the vehicle on a level firm ground, firmly set the parking brake and put the transmission in ”P” (automatic) or reverse (manual). Block the wheel diagonally opposite to the one being changed if necessary.**
- **Make sure to set the jack properly in the jack point. Raising the vehicle with jack improperly positioned will damage the vehicle or may allow the vehicle to fall off the jack and cause personal injury.**
- **Never get under the vehicle when the vehicle is supported by the jack alone.**
- **Use the jack only for lifting your vehicle during wheel changing.**
- **Do not raise the vehicle with someone in the vehicle.**
- **When raising the vehicle, do not put an object on or under the jack.**
- **Raise the vehicle only high enough to remove and change the tire.**

***NOTICE***

***Do not continue driving with a deflated tire. Driving even a short distance can damage a tire beyond repair.***

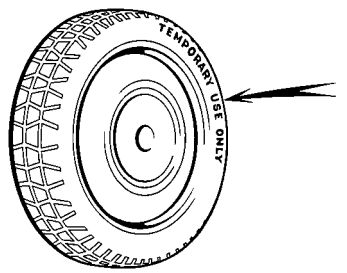


K40019

**Compact spare tire**

**The compact spare tire is designed for temporary emergency use only.**

The compact spare tire is identified by the distinctive wheel design and color and special wording ”TEMPORARY USE ONLY” molded into the side wall of the tire.

The standard tire should be repaired and replaced as soon as possible.

To keep the compact spare tire noticeable, do not hide the wheel by a wheel cover or such.

The compact spare tire saves space in your trunk, and its lighter weight helps to improve fuel economy and permits easier installation in case of a flat tire.

The compact spare tire can be used many times, if necessary. It has tread life of up to 4800 km (3000 miles) depending on road conditions and your driving habits. When tread wear indicators appear on the tire, replace the tire.

See also the tire section in Chapter 7-2 for details on the tread wear indicators and other service information.

**⚠ CAUTION**

- **The compact spare tire was designed especially for your Toyota. Do not use it on any other vehicle.**
- **Do not exceed 80 km/h (50 mph) when driving with the compact spare tire.**
- **Avoid sudden acceleration, sudden deceleration and sharp turns with the compact spare tire.**

***NOTICE***

***Your ground clearance is reduced when the compact spare tire is installed so avoid driving over obstacles and drive slowly on rough, unpaved roads and speed bumps. Also, do not attempt to go through an automatic car wash as the vehicle may get caught, resulting in damage.***

## —Required tools and spare tire

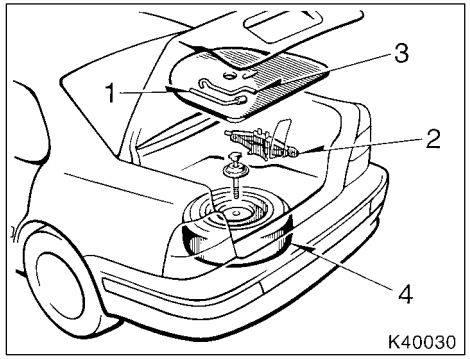


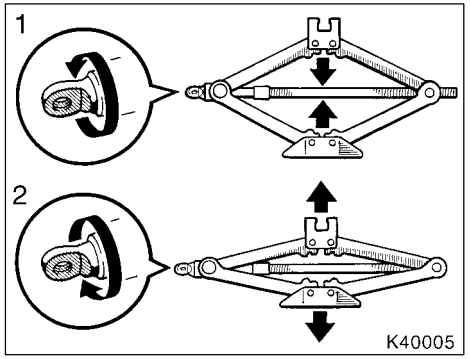


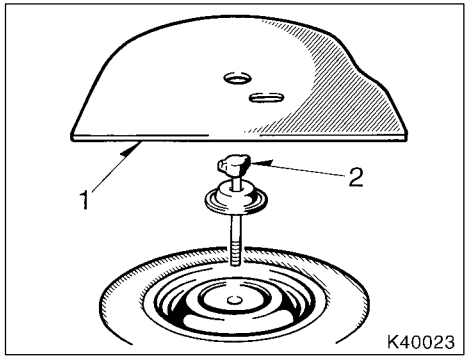


**1. Get the required tools and spare tire.**

1 Wheel nut wrench
2 Jack
3 Jack handle
4 Spare tire

To prepare yourself for an emergency, you should familiarize yourself with the use of the jack, each of the tools and their storage locations.

Turn the jack joint by hand.

To remove: Turn the joint in direction 1 until the jack is free.
To store: Turn the joint in direction 2 until the jack is firmly secured to prevent it flying forward during a collision or sudden braking.

To remove the spare tire:

1. Remove the spare tire cover.
2. Loosen the bolt and remove it.

Then take the spare tire out of the vehicle.

When storing the spare tire, put it in place with the outer side of the wheel facing up. Then secure the tire by repeating the above removal steps in reverse order to prevent it from flying forward during a collision or sudden braking.

## —Blocking the wheel

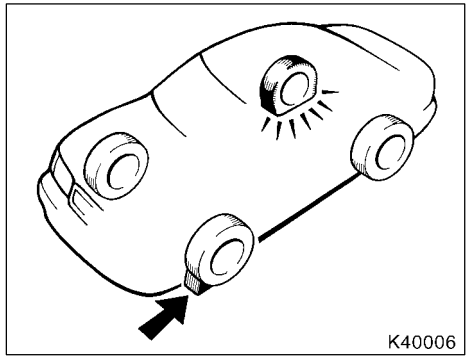


**2. Block the wheel diagonally opposite the flat tire to keep the vehicle from rolling when it is jacked up.**

When blocking the wheel, place a wheel block from the front for the front wheels or from the rear for the rear wheels.

## —Removing wheel ornament

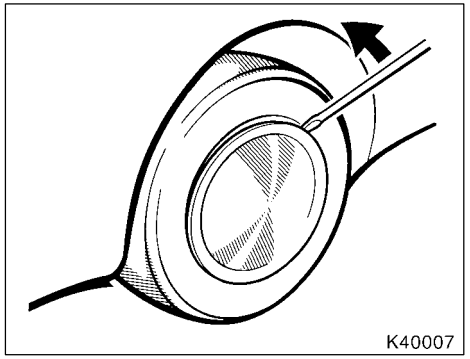


**Type A**

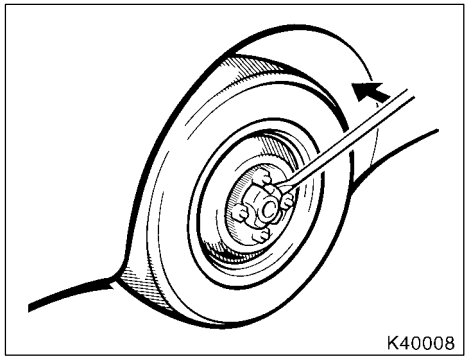


**Type B**

**3. Remove the wheel ornament.**

Pry off the wheel ornament, using the beveled end of the wheel nut wrench as shown.

**⚠ CAUTION**

**Do not try to pull off the ornament by hand. Take due care in handling the ornament to avoid unexpected personal injury.**

## —Loosening wheel nuts

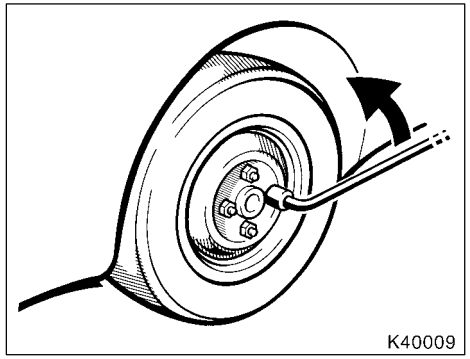


**4. Loosen all the wheel nuts.**

Always loosen the wheel nuts before raising the vehicle.

The nuts turn counterclockwise to loosen. To get maximum leverage, fit the wrench to the nut so that the handle is on the right side, as shown above. Grab the wrench near the end of the handle and pull up on the handle. Be careful that the wrench does not slip off the nut.

Do not remove the nuts yet—just unscrew them about one-half turn.

## —Positioning the jack

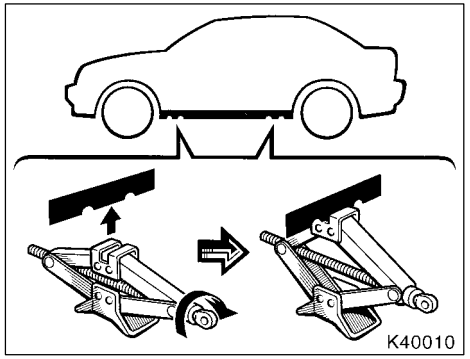


**5. Position the jack at the correct jack point as shown.**

Make sure the jack is positioned on a level and solid place.

## —Raising your vehicle

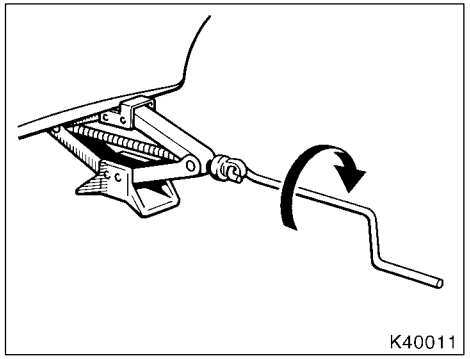


**6. After making sure that no one is in the vehicle, raise it high enough so that the spare tire can be installed.**

Remember you will need more ground clearance when putting on the spare tire than when removing the flat tire.

To raise the vehicle, insert the jack handle into the jack (it is a loose fit) and turn it clockwise. As the jack touches the vehicle and begins to lift, double-check that it is properly positioned.

## —Changing wheels

**⚠ CAUTION**

**Never get under the vehicle when the vehicle is supported by the jack alone.**

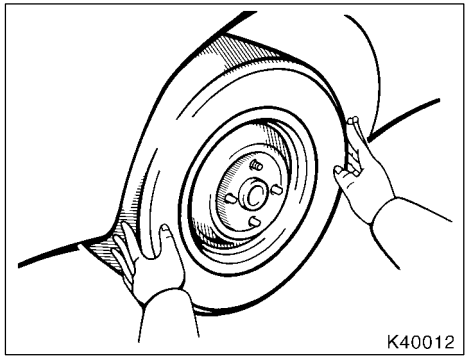


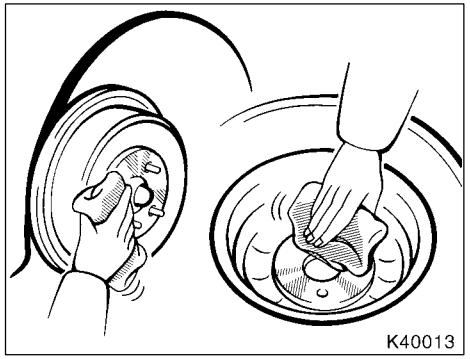


**7. Remove the wheel nuts and change tires.**

Lift the flat tire straight off and put it aside.

Roll the spare wheel into position and align the holes in the wheel with the bolts. Then lift up the wheel and get at least the top bolt started through its hole. Wiggle the tire and press it back over the other bolts.

Before putting on wheels, remove any corrosion on the mounting surfaces with a wire brush or such. Installation of wheels without good metal-to-metal contact at the mounting surface can cause wheel nuts to loosen and eventually cause a wheel to come off while driving. Therefore after the first 1600 km (1000 miles), check to see that the wheel nuts are tight.

## —Reinstalling wheel nuts

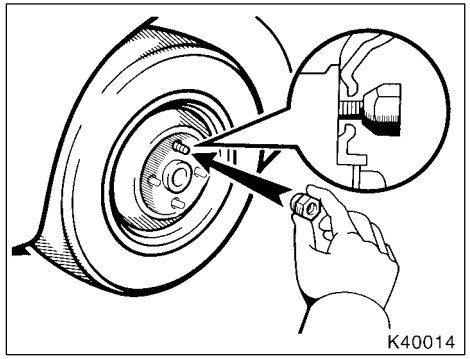


**8. Reinstall all the wheel nuts finger tight.**

Reinstall the wheel nuts (tapered end inward) and tighten them as much as you can by hand. Press back on the tire and see if you can tighten them more.

## —Lowering your vehicle

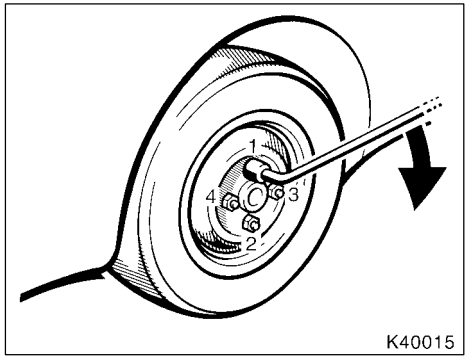


**9. Lower the vehicle completely and tighten the wheel nuts.**

Turn the jack handle counterclockwise to lower the vehicle.

Use only the wheel nut wrench and turn it clockwise to tighten the nuts. Do not use other tools or any additional leverage other than your hands, such as a hammer, pipe or your foot. Make sure the wrench is securely engaged over the nut.

Tighten each nut a little at a time in the order shown. Repeat the process until all the nuts are tight.

**⚠ CAUTION**

**When lowering the vehicle, make sure all portions of your body and all other persons around will not be injured as the vehicle is lowered to the ground.**

## —Reinstalling wheel ornament

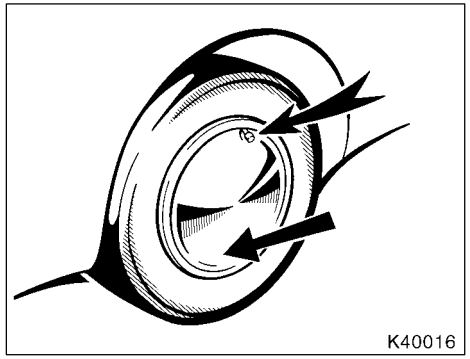


**10. Reinstall the wheel ornament.**

Align the cutout of the wheel ornament with the valve stem as shown. Then tap it firmly with the side or heel of your hand to snap it into place.

**⚠ CAUTION**

**Take due care in handling the ornament to avoid unexpected personal injury.**

## —After changing wheels

**11. Check the air pressure of the replaced tire.**

Adjust the air pressure to the specification designed in Part 8. If the pressure is lower, drive slowly to the nearest service station and fill to the correct pressure.

Do not forget to reinstall the tire inflation valve cap as dirt and moisture could get into the valve core and possibly cause air leakage. If the cap is missing, have a new one put on as soon as possible.

**12. Restow all the tools, jack and flat tire securely.**

As soon after changing wheels as possible, tighten the wheel nuts to the torque specified in Part 8 with a torque wrench, have a technician repair the flat tire and replace the spare tire with it.

**⚠ CAUTION**

**Before driving, make sure all the tools, jack and flat tire are securely in place in their storage location to reduce the possibility of personal injury during a collision or sudden braking.**

## If your vehicle needs to be towed—

(a) Towing with wheel lift type truck—

—From front

—From rear

(b) Using flat bed truck

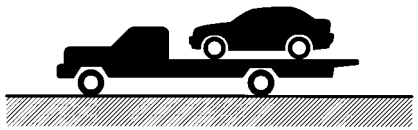

**If towing is necessary, we recommend you to have it done by your Toyota dealer or a commercial tow truck service. In consultation with them, have your vehicle towed using either (a) or (b).**

**Only when you cannot receive a towing service from a Toyota dealer or commercial tow truck service, tow your vehicle carefully in accordance with the instructions given in ”—Emergency towing” in this part.**

Proper equipment will help ensure that your vehicle is not damaged while being towed. Commercial operators are generally aware of the state/provincial and local laws pertaining to towing.

Your vehicle can be damaged if it is towed incorrectly. Although most operators know the correct procedure, it is possible to make a mistake. To avoid damage to your vehicle, make sure the following few precautions are observed. If necessary, show this page to the tow truck driver.

**TOWING PRECAUTIONS:**

Use a safety chain system for all towing, and abide by the state/provincial and local laws. The wheels and axle on the ground must be in good condition. If they are damaged, use a towing dolly.

**(a) Towing with wheel lift type truck**

**From front—**Release the parking brake.

***NOTICE***

***When lifting wheels, take care to ensure adequate ground clearance for towing at the opposite end of the raised vehicle. Otherwise, the bumper and/or underbody of the towed vehicle will be damaged during towing.***

**From rear—**

- Manual transmission:

  We recommend using a towing dolly under the front wheels. If you do not use a towing dolly, place the ignition key in the ”ACC” position and put the transmission in neutral.

***NOTICE***

***Do not tow with the key removed or in the ”LOCK” position when towing from the rear without a towing dolly. The steering lock mechanism is not strong enough to hold the front wheels straight.***

- Automatic transmission:

  Use a towing dolly under the front wheels.

***NOTICE***

***Never tow a vehicle with an automatic transmission from the rear with the front wheels on the ground, as this may cause serious damage to the transmission.***

**(b) Using flat bed truck**

## —Emergency towing

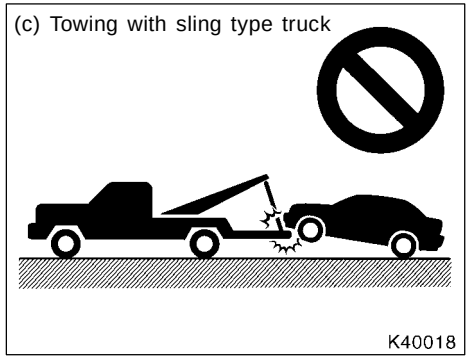


**(c) Towing with sling type truck**

| ***NOTICE*** |
|---|
| ***Do not tow with sling type truck, either from the front or rear. This may cause body damage.*** |

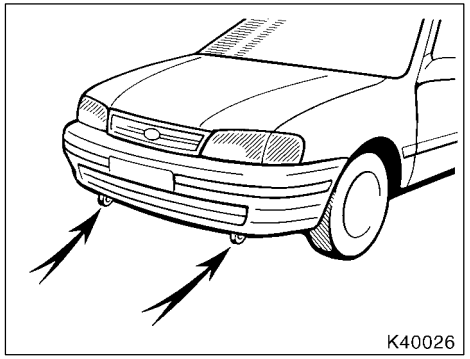


**Front**

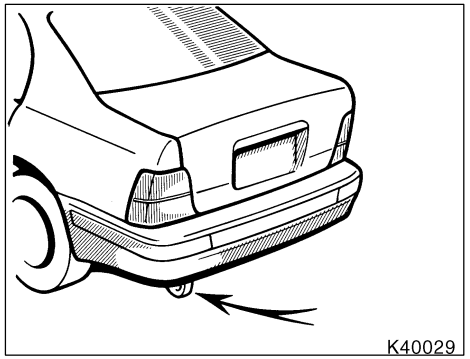


**Rear**

**If towing is necessary, we recommend you to have it done by your Toyota dealer or a commercial tow truck service.**

**If towing service is not available in an emergency, your vehicle may be temporarily towed by a cable or chain secured to either emergency towing eyelets under the front of the vehicle or the left emergency towing eyelet under the rear of the vehicle. Use extreme caution when towing vehicles.**

A driver must be in the vehicle to steer it and operate the brakes.

Towing in this manner may be done only on hard-surfaced roads for a short distance and at low speeds. Also, the wheels, axles, drive, train, steering and brakes must all be in good condition.

| **⚠ CAUTION** |
|---|
| **Use extreme caution when towing vehicles. Avoid sudden starts or erratic driving maneuvers which would place excessive stress on the emergency towing eyelet and towing cable or chain. The eyelet and towing cable or chain may break and cause serious injury or damage.** |

**NOTICE**

***Use only a cable or chain specifically intended for use in towing vehicles. Securely fasten the cable or chain to the towing eyelet provided.***

Before towing, release the parking brake and put the transmission in neutral (manual) or ”N” (automatic). The key must be in ”ACC” (engine off) or ”ON” (engine running).

**⚠ CAUTION**

**If the engine is not running, the power assist for the brakes and steering will not work so steering and braking will be much harder than usual.**

## If you cannot shift automatic transmission selector lever

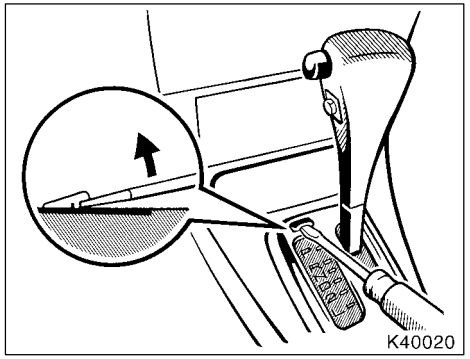


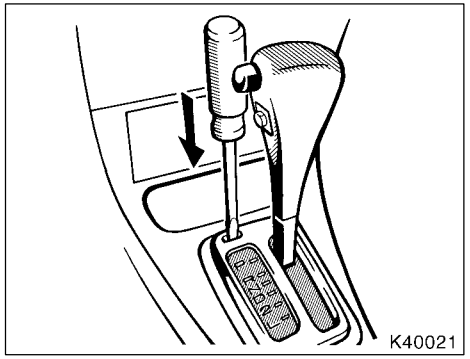


**If you cannot shift the selector lever out of ”P” position to other positions even though the brake pedal is depressed, use the shift lock override button as follows:**

1. **Turn the ignition key to ”LOCK” position. Make sure the parking brake is on.**
2. **Pry up the cover with a flat-bladed screwdriver or equivalent.**
3. **Insert the screwdriver or equivalent into the hole to push down the shift lock override button. You can shift out of ”P” position only while pushing the button.**
4. **Shift into ”N” position.**
5. **Insert the cover.**
6. **Start the engine. For your safety, keep the brake pedal depressed.**

Be sure to have the system checked by your Toyota dealer as soon as possible.

## If you lose your keys

**Many Toyota dealers can make a new key if you can give them the key number.**

See the suggestion given in ”Keys” in Chapter 1-2.

If your keys are locked in the vehicle and you cannot get a duplicate, many Toyota dealers can still open the door for you, using their special tools. If you must break a window to get in, we suggest breaking the smallest side window because it is the least expensive to replace. Be extremely cautious to avoid cuts from the glass.

# Part 5 CORROSION PREVENTION AND APPEARANCE CARE


- Protecting your Toyota from corrosion
- Washing and waxing your Toyota
- Cleaning the interior


## Protecting your Toyota from corrosion

Toyota, through its diligent research, design and use of the most advanced technology available, has done its part to help prevent corrosion and has provided you with the finest quality vehicle construction. Now, it is up to you. Proper care of your Toyota can help ensure long-term corrosion prevention.

**The most common causes of corrosion to your vehicle are:**

- The accumulation of road salt, dirt and moisture in hard-to-reach areas under the vehicle.
- Chipping of paint, or undercoating caused by minor accidents or by stones and gravel.

**Care is especially important if you live in particular areas or operate your vehicle under certain environmental conditions:**

- Road salt or dust control chemicals will accelerate corrosion, as will the presence of salt in the air near the seacoast or in areas of industrial pollution.
- High humidity accelerates corrosion especially when temperatures range just above the freezing point.
- Wetness or dampness to certain parts of your vehicle for an extended period of time, may cause corrosion even though other parts of the vehicle may be dry.
- High temperatures will cause corrosion to those components of the vehicle which are prevented from quick-drying due to lack of proper ventilation.

The above signifies the necessity to keep your vehicle, particularly the underside, as clean as possible and to repair any damage to paint or protective coatings as soon as possible.

**To help prevent corrosion on your Toyota, follow these guidelines:**

**Wash your vehicle frequently.** It is, of course, necessary to keep your vehicle clean by regular washing, but to prevent corrosion, the following points should be observed:

- If you drive on salted roads in the winter or if you live near the ocean, you should hose off the undercarriage at least once a month to minimize corrosion.

- High pressure water or steam is effective for cleaning the vehicle’s underside and wheel housings. Pay particular attention to these areas as it is difficult to see all the mud and dirt. It will do more harm than good to simply wet the mud and debris without removing them. The lower edge of doors, rocker panels and frame members have drain holes which should not be allowed to clog with dirt as trapped water in these areas can cause corrosion.
- Wash the underside of the vehicle thoroughly when winter is over.

See ”Washing and waxing your Toyota” for more tips.

**Check the condition of your vehicle’s paint and trim.** If you find any chips or scratches in the paint, touch them up immediately to prevent corrosion from starting. If the chips or scratches have gone through the bare metal, have a qualified body shop make the repair.

**Check the interior of your vehicle.** Water and dirt can accumulate under the floor mats and could cause corrosion. Occasionally check under the mats to make sure the area is dry. Be particularly careful when transporting chemicals, cleansers, fertilizers, salt, etc.; these should be transported in proper containers. If a spill or leak should occur, immediately clean and dry the area.

**Use mud shields on your wheels.** If you drive on salted or gravel roads, mud shields help protect your vehicle. Full-size shields, which come as near to the ground as possible, are the best. We recommend that the fittings and the area where the shields are installed be treated to resist corrosion. Your Toyota dealer will be happy to assist in supplying and installing the shields if they are recommended for your area.

**Keep your vehicle in a well ventilated garage or a roofed place. Do not park your vehicle in a damp, poorly ventilated garage.** If you wash your vehicle in the garage, or if you drive it in covered with water or snow, your garage may be so damp it will cause corrosion. Even if your garage is heated, a wet vehicle can corrode if the ventilation is poor.

## Washing and waxing your Toyota

### Washing your Toyota

**Keep your vehicle clean by regular washing.**

The following cases may cause weakness to the paint or corrosion to the body and parts. Wash your vehicle as soon as possible.

- When driving in a coastal area
- When driving on a road sprinkled with antifreeze
- When having stuck of coal tar, tree sap, bird droppings and carcass of an insect
- When driving in the areas where there is a lot of smoke, soot, dust, iron dust and chemical substance
- When the vehicle becomes remarkably dirty with dust and mud

### Hand-washing your Toyota

**Work in the shade and wait until the vehicle body is not hot to the touch.**

**⚠ CAUTION**

**When cleaning under floor or chassis, be careful not to injure your hands.**

1. Rinse off loose dirt with a hose. Remove any mud or road salt from the underside of the vehicle or in the wheel wells.
2. Wash with a mild car-wash soap, mixed according to the manufacturer’s instructions. Use a soft cotton mitt and keep it wet by dipping it frequently into the wash water. Do not rub hard–let the soap and water remove the dirt.

Plastic bumpers: Wash carefully. Do not scrub with abrasive cleaners. The bumper faces are soft.

Road tar: Remove with turpentine or cleaners that are marked safe for painted surfaces.

**NOTICE**

***Do not use gasoline or strong solvents, which may be toxic or cause damage.***

3. Rinse thoroughly—dried soap can cause streaking. In hot weather you may need to rinse each section right after you wash it.
4. To prevent water spots, dry the vehicle using a clean soft cotton towel. Do not rub or press hard—you might scratch the paint.

**Automatic car wash**

Your vehicle may be washed in an automatic car wash, but remember that the paint can be scratched by some type of brushes, unfiltered washing water, or the washing process itself. Scratching reduces paint durability and gloss, especially on darker colors. The manager of the car wash should be able to advise you whether the process is safe for the paint on your vehicle.

**NOTICE**

***To prevent damage to the antenna, make sure it is retracted before driving your Toyota through an automatic car wash.***

**Waxing your Toyota**

**Polishing and waxing is recommended to maintain the original beauty of your Toyota’s finish.**

Once a month or if the vehicle does not repel water well, apply wax.

1. Always wash and dry the vehicle before you begin waxing, even if you are using a combined cleaner and wax.
2. Use a good quality polish and wax. If the finish has become extremely weathered, use a car-cleaning polish, followed by a separate wax. Carefully follow the manufacturer’s instructions and precautions. Be sure to polish and wax the chrome trim as well as the paint.
3. Wax the vehicle again when water does not bead but remains on the surface in large patches.

**NOTICE**

***Always remove the plastic bumpers if your vehicle is re-painted and placed in a high heat paint waxing booth. High temperatures could damage the bumpers.***

## Cleaning the interior

**⚠ CAUTION**

**Do not wash the vehicle floor with water, or allow water to get onto the floor when cleaning the vehicle interior or exterior. Water may get into audio components or other electrical components above or under the floor carpet (or mat) and cause a malfunction; and it may cause body corrosion.**

### Vinyl interior

**The vinyl upholstery may be easily cleaned with a mild soap or detergent and water.**

First vacuum over the upholstery to remove loose dirt. Then, using a sponge or soft cloth, apply the soap solution to the vinyl. After allowing it to soak in for a few minutes to loosen the dirt, remove the dirt and wipe off the soap with a clean damp cloth. If all the dirt do not come off, repeat the procedure. Commercial foaming-type vinyl cleaners are also available which work well. Follow the manufacturer’s instructions.

***NOTICE***

***Do not use solvent, thinner, gasoline or window cleaner on the interior.***

### Carpets

**Use a good foam-type shampoo to clean the carpets.**

Begin by vacuuming thoroughly to remove as much dirt as possible. Several types of foam cleaners are available; some are in aerosol cans and others are powders or liquids which you mix with water to produce a foam. To shampoo the carpets, use a sponge or brush to apply the foam. Rub in overlapping circles.

Do not apply water—the best results are obtained by keeping the carpet as dry as possible. Read the shampoo instructions and follow them closely.

### Seat belts

**The seat belts may be cleaned with mild soap and water or with lukewarm water.**

Use a cloth or sponge. As you are cleaning, check the belts for excessive wear, fraying, or cuts.

***NOTICE***

- ***Do not use dye or bleach on the belts–it may weaken them.***
- ***Do not use the belts until they become dry.***

### Windows

**The windows may be cleaned with any household window cleaner.**

***NOTICE***

***When cleaning the inside of the windows, be careful not to scratch or damage the heater wires on the rear window.***

### Air conditioning control panel, car audio, instrument panel, console panel, and switches

**Use a soft damp cloth for cleaning.**

Soak a clean soft cloth in water or lukewarm water then lightly wipe off dirt.

**NOTICE**

- ***Do not use organic substances (solvents, kerosene, alcohol, gasoline, etc.) or alkaline or acidic solutions. These chemicals can cause discoloring, staining or peeling of the surface.***
- ***If you use cleaners or polishing agents, make sure their ingredients do not include the substances mentioned above.***
- ***If you use a liquid car freshener, do not spill the liquid onto the vehicle’s interior surfaces. It may contain the ingredients mentioned above. Immediately clean any spill using the method mentioned above.***

**Leather Interior**

**The leather upholstery may be cleaned with neutral detergent for wool.**

Remove dirt using a soft cloth dampened with 5% solution of neutral detergent for wool. Then thoroughly wipe off all traces of detergent with a clean damp cloth.

After cleaning or whenever any part of the leather gets wet, dry with a soft clean cloth. Allow the leather to dry in a ventilated shaded area.

**NOTICE**

- ***If a stain should fail to come out with a neutral detergent,apply a cleaner that does not contain an organic solvent.***
- ***Never use organic substances such as benzine, alcohol or gasoline or alkaline or acid solutions for cleaning the leather as these could cause discoloring.***
- ***Use of a nylon brush or synthetic fiber cloth, etc. may scratch the fine grained surface of the leather.***
- ***Mildew may develop on soiled leather upholstery. Be especially careful to avoid oil spots. Try to keep your upholstery always clean.***
- ***Long exposure to direct sunlight may cause the leather surface to harden and shrink. Keep your vehicle in a shaded area, especially in the summer.***
- ***The interior of your vehicle is apt to heat up on hot summer days, so avoid placing on the upholstery items made of vinyl or plastic or containing wax as these tend to stick to leather when warm.***
- ***Improper cleaning of the leather upholstery could result in discoloration or staining.***

**If you have any questions about the cleaning of your Toyota, your local Toyota dealer will be pleased to answer them.**

# Part 6 VEHICLE MAINTENANCE AND CARE


- Maintenance requirements
- General maintenance
- Does your vehicle need repairing?


For schedule maintenance information, please refer to the separate ”Scheduled Maintenance Guide” or ”Owner’s Manual Supplement”.

## Maintenance requirements

Your Toyota vehicle has been designed to for fewer maintenance requirements with longer service intervals to save both your time and money. However, each regular maintenance, as well as day-to-day care, is more important than ever before to ensure smooth, and trouble-free, safe, and economical driving.

It is the owner’s responsibility to make sure the specified maintenance, including general maintenance service is performed. Note that both the new vehicle and emission control system warranties specify that proper maintenance and care must be performed. See ”Owner’s Warranty Information Booklet” or ”Owner’s Manual Supplement” for complete warranty information.

### General maintenance

General maintenance items are those day-to-day care practices that are important to your vehicle for proper operation. It is the owner’s responsibility to ensure that the general maintenance items are performed regularly.

These checks or inspections can be done either by yourself or a qualified technician, or if you prefer, your Toyota dealer will be pleased to do them at a nominal cost.

### Scheduled maintenance

The scheduled maintenance items listed in the ”Scheduled Maintenance Guide” or ”Owner’s Manual Supplement” are those required to be serviced at regular intervals.

For details of your maintenance Schedule, read the separate ”Scheduled Maintenance Guide” or ”Owner’s Manual Supplement”.

**It is recommended that any replacement parts used for maintenance or for the repair of the emission control system be Toyota supplied.**

**The owner may elect to use non-Toyota supplied parts for replacement purposes without invalidating the emission control system warranty. However, use of replacement parts which are not of equivalent quality may impair the effectiveness of the emission control systems.**

**You may also elect to have maintenance, replacement, or repair of the emission control devices and system performed by any automotive repair establishment or individual without invalidating this warranty. See ”Owner’s Warranty Information Booklet” or ”Owner’s Manual Supplement” for complete warranty information.**

**Where to go for service?**

Toyota technicians are well-trained specialists and are kept up to date with the latest service information through technical bulletins, service tips, and in-dealership training programs. They learn to work on Toyotas before they work on your vehicle, rather than while they are working on it.

You can be confident that your Toyota dealer’s service department performs the best job to meet the maintenance requirements on your vehicle–reliably and economically.

Your copy of the repair order is proof that all required maintenance has been performed for warranty coverage. And if any problems should arise with your vehicle while under warranty, your Toyota dealer will promptly take care of it. Again, be sure to keep a copy of the repair order for any service performed on your Toyota.

**What about do-it-yourself maintenance?**

Many of the maintenance items are easy to do yourself if you have a little mechanical ability and a few basic automotive tools. Simple instructions for how to perform them are presented in Part 7.

If you are a skilled do-it-yourself mechanic, the Toyota service manuals are recommended. Please be aware that do-it-yourself maintenance can affect your warranty coverage. See ”Owner’s Warranty Information Booklet” or ”Owner’s Manual Supplement” for the details.

## General maintenance

Listed below are the general maintenance items that should be performed as frequently as specified. In addition to checking the items listed, if you notice any unusual noise, smell or vibration, you should investigate the cause or take your vehicle to your Toyota dealer or a qualified service shop immediately. It is recommended that any problem you notice be brought to the attention of your dealer or the qualified service shop for their advice.

**⚠ CAUTION**

**Make these checks only where adequate ventilation can be obtained if you run the engine.**

**OUTSIDE THE VEHICLE**

**Items listed below should be performed from time to time, unless otherwise specified.**

**Tire pressure**

Check the pressure with a gauge every two weeks, or at least once a month. See Chapter 7-2 for additional information.

**Tire surface and wheel nuts**
Check the tires carefully for cuts, damage or excessive wear. See Chapter 7-2 for additional information. When checking the tires, make sure no nuts are missing, and check the nuts for looseness. Tighten them if necessary.

**Tire rotation**
Rotate the tires every 12000 km (7500 miles). See Chapter 7-2 for additional information.

**Fluid leaks**
Check underneath for leaking fuel, oil, water or other fluid after the vehicle has been parked for a while. If you smell fuel fumes or notice any leak, have the cause found and corrected immediately.

**Doors and engine hood**
Check that all doors including trunk lid operate smoothly and all latches lock securely. Make sure the engine hood secondary latch secures the hood from opening when the primary latch is released.

**INSIDE THE VEHICLE**

**Items listed below should be checked regularly, e.g. while performing periodic services, cleaning the vehicle, etc.**

**Lights**
Make sure the headlights, stop lights, tail lights, turn signal lights, and other lights are all working. Check headlight aim.

**Service reminder indicators and warning buzzers**
Check that all service reminder indicators and warning buzzers function properly.

**Steering wheel**
Check that it has the specified freeplay. Be alert for changes in steering condition, such as hard steering or strange noise.

**Seats**
Check that all front seat controls such as seat adjusters, seatback recliner, etc. operate smoothly and that all latches lock securely in any position. For folding-down rear seatbacks, check that the latches lock securely.

**Seat belts**
Check that the seat belt system such as buckles, retractors and anchors operate properly and smoothly. Make sure the belt webbing is not cut, frayed, worn or damaged.

**Accelerator pedal**
Check the pedal for smooth operation and uneven pedal effort or catching.

**Clutch pedal**
Check the pedal for smooth operation.

**Brake pedal**
Check the pedal for smooth operation and that the pedal has the proper clearance. Check the brake booster function.

**Brakes**
At a safe place, check that the brakes do not pull to one side when applied.

**Parking brake**
Check that the lever has the proper travel and that, on a safe incline, your vehicle is held securely with only the parking brake applied.

**Automatic transmission ”Park” mechanism**
Check the lock release button of the selector lever for proper and smooth operation. On a safe incline, check that your vehicle is held securely with the selector lever in ”P” position and all brakes released.

**IN THE ENGINE COMPARTMENT**

**Items listed below should be checked from time to time, e.g. each time when refueling.**

**Washer fluid**
Make sure there is sufficient fluid in the tank. See Chapter 7-3 for additional information.

**Engine coolant level**
Make sure the coolant level is between the ”FULL” and ”LOW” lines on the see-through reservoir when the engine is cold. See Chapter 7-2 for additional information when the engine is cold.

**Battery electrolyte level**
Make sure the electrolyte level of all battery cells is between upper and lower level lines on the case. Add only distilled water when replenishing. See Chapter 7-3 for additional information.

**Brake fluid level**
Make sure the brake fluid level is correct. See Chapter 7-2 for additional information.

**Engine oil level**
Check the level on the dipstick with the engine turned off and the vehicle parked on a level spot. See Chapter 7-2 for additional information.

**Power steering fluid level**
Check the level through the reservoir. The level should be in the ”HOT” or ”COLD” range depending on the fluid temperature. See Chapter 7-2 for additional information.

**Exhaust system**
If you notice any change in the sound of the exhaust or smell exhaust fumes, have the cause located and corrected immediately. (See engine exhaust cautions in Part 2.)

## Does your vehicle need repairing?

Be on the alert for changes in performance, sounds, and visual tip-offs that indicate service is needed. Some important clues are as follows:

- Engine missing, stumbling, or pinging
- Appreciable loss of power
- Strange engine noises
- A leak under the vehicle (however, water dripping from the air conditioning after use is normal.)
- Change in exhaust sound (This may indicate a dangerous carbon monoxide leak. Drive with the windows open and have the exhaust system checked immediately.)
- Flat-looking tire; excessive tire squeal when cornering; uneven tire wear
- Vehicle pulls to one side when driving straight on a level road
- Strange noises related to suspension movement
- Loss of brake effectiveness; spongy feeling brake or clutch pedal; pedal almost touches floor; vehicle pulls to one side when braking
- Engine coolant temperature continually higher than normal

If you notice any of these clues, take your vehicle to your Toyota dealer as soon as possible. It probably needs adjustment or repair.

**⚠ CAUTION**

**Do not continue driving with the vehicle unchecked. It could result in serious vehicle damage and possibly personal injury.**

# Part 7
# DO- IT- YOURSELF MAINTENANCE—

## Chapter 7- 1
## Introduction

- Engine compartment overview
- Fuse locations
- Do- it- yourself service precautions
- Parts and tools

## Engine compartment overview

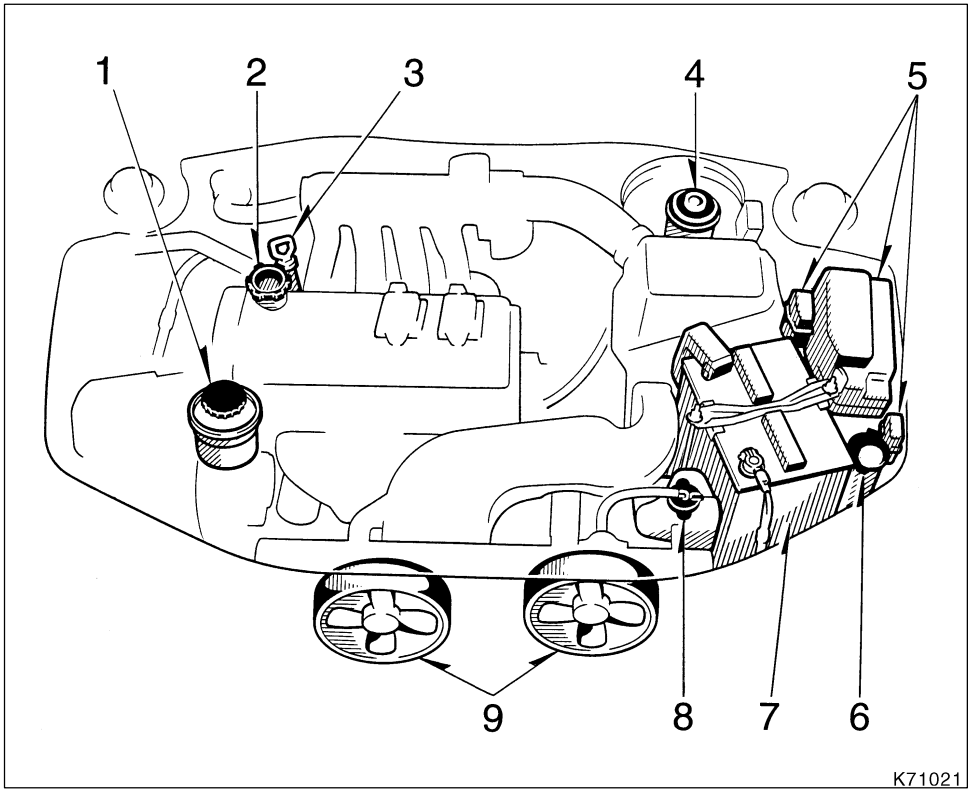


1. Power steering fluid reservoir
2. Engine oil filler cap
3. Engine oil level dipstick
4. Brake fluid reservoir
5. Fuse blocks
6. Windshield washer fluid tank
7. Battery
8. Engine coolant reservoir
9. Electric cooling fans

## Fuse locations

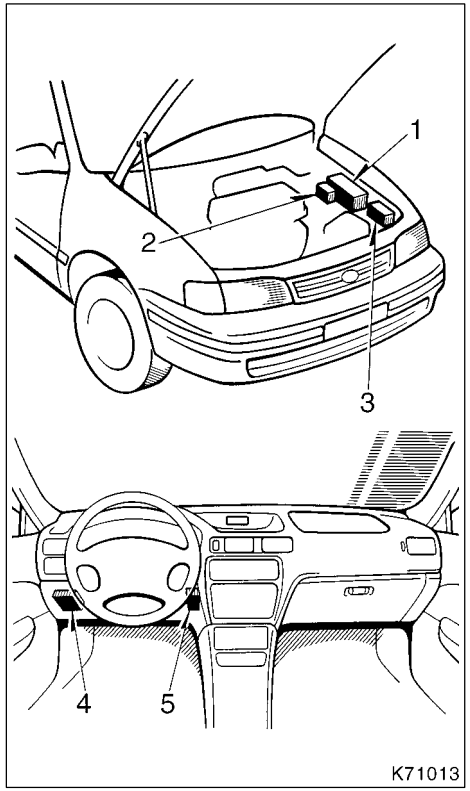


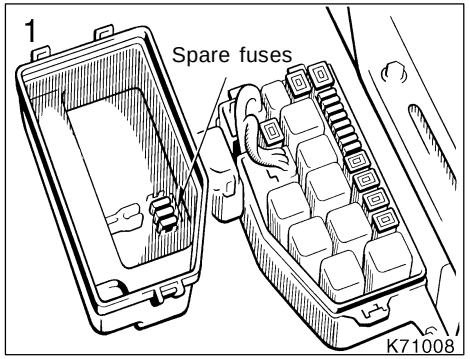


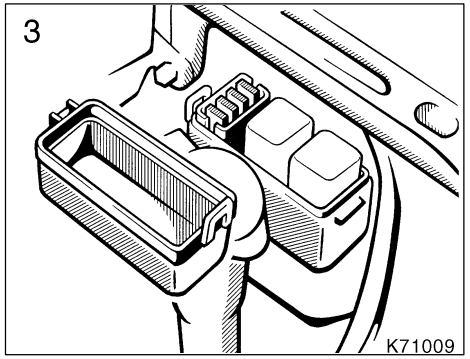


**Canada only**

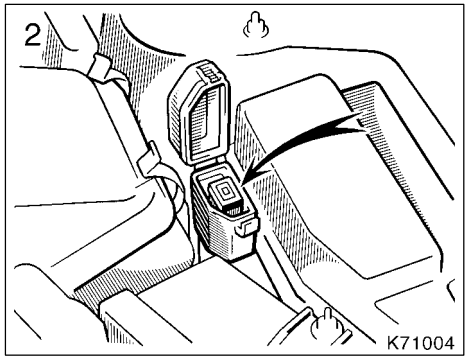


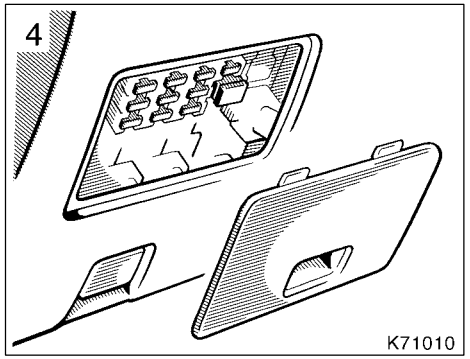

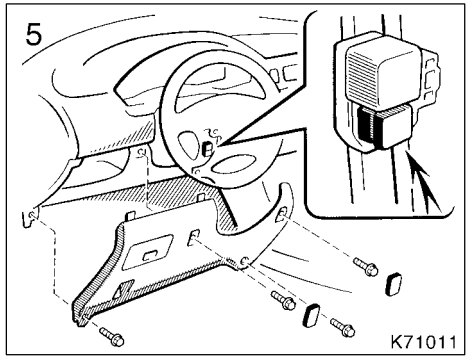


## Do- it- yourself service precautions

**If you perform maintenance by yourself, be sure to follow the correct procedure given in this part.**

You should be aware that improper or incomplete servicing may result in operating problems.

Performing do- it- yourself maintenance during the warranty period may affect your warranty coverage. Read the separate Toyota Warranty statement for details and suggestions.

This part gives instructions only for those items that are relatively easy for an owner to perform. As explained in Part 6, there are still a number of items that must be done by a qualified technician with special tools.

For information on tools and parts for do- it- yourself maintenance, see ”Parts and tools”.

Utmost care should be taken when working on your vehicle to prevent accidental injury. Here are a few precautions that you should be especially careful to observe:

**⚠ CAUTION**

- **When the engine is running, keep hands, clothing, and tools away from the moving fan and engine drive belts. (Removing rings, watches, and ties is advisable.)**
- **Right after driving, the engine compartment—the engine, radiator, exhaust manifold, power steering fluid reservoir and spark plug boots, etc.—will be hot. So be careful not to touch them. Oil, fluids and spark plugs may also be hot.**
- **If the engine is hot, do not remove the radiator cap or loosen the drain plugs to prevent burning yourself.**
- **Do not smoke, cause sparks or allow open flames around fuel or the battery. Their fumes are flammable.**
- **Be extremely cautious when working on the battery. It contains poisonous and corrosive sulfuric acid.**
- **Do not get under your vehicle with just the body jack supporting it. Always use automotive jack stands or other solid supports.**

- **Be sure that the ignition is off if you work near the electric cooling fans or radiator grille. With the ignition on, the electric cooling fans will automatically start to run if the engine coolant temperature is high and/or the air conditioning is on.**
- **Use eye protection whenever you work on or under your vehicle where you may be exposed to flying or falling material, fluid spray, etc.**
- **Used engine oil contains potentially harmful contaminants which may cause skin disorders such as inflammation or skin cancer, so care should be taken to avoid prolonged and repeated contact with it. To remove used engine oil from your skin, wash thoroughly with soap and water.**
- **Do not leave used oil within the reach of children.**

- **Dispose of used oil and filter only in a safe and acceptable manner. Do not dispose of used oil and filter in household trash, in sewers or onto the ground. Call your dealer or a service station for information concerning recycling or disposal.**

***NOTICE***

- ***Remember that battery and ignition cables carry high currents or voltages. Be careful of accidentally causing a short circuit.***
- ***Add only demineralized or distilled water to fill the radiator. And if you spill some of the coolant, be sure to wash it off with water to prevent it from damaging the parts or paint.***
- ***Do not allow dirt or anything else to fall through the spark plug holes.***
- ***Do not pry the outer electrode of a spark plug against the center electrode.***
- ***Use only spark plugs of the specified type. Using other types will cause engine damage, loss of performance or radio noise.***
- ***Do not overfill automatic transmission fluid, or the transmission could be damaged.***
- ***Do not drive with the air cleaner filter removed, or excessive engine wear could result. Also backfiring could cause a fire in the engine compartment.***
- ***Be careful not to scratch the glass surface with the wiper frame.***
- ***When closing the engine hood, check to see that you have not forgotten any tools, rags, etc.***

## Parts and tools

Here is a list of parts and tools you will need on performing do-it-yourself maintenance. Remember all Toyota parts are designed in metric sizes, so your tools must be metric.

**Checking the engine oil level**

**Parts (if level is low):**

- Engine oil API grade SJ, ”Energy-Conserving” or ILSAC multigrade having viscosity proper for your climate

**Tools:**

- Rag or paper towel
- Funnel (only for adding oil)

**Checking the engine coolant level**

**Parts (if level is low):**

- ”Toyota Long Life Coolant” or equivalent
  See Chapter 7-2 for details about coolant type selection.
- Demineralized or distilled water

**Tools:**

- Funnel (only for adding coolant)

**Checking brake fluid**

**Parts (if level is low):**

- SAE J1703 or FMVSS No.116 DOT 3 brake fluid

**Tools:**

- Rag or paper towel
- Funnel (only for adding fluid)

**Checking power steering fluid**

**Parts (if level is low):**

- Automatic transmission fluid DEXRON®II or III

**Tools:**

- Rag or paper towel
- Funnel (only for adding fluid)

**Checking battery condition**

Non-maintenance batteries—

**Tools:**

- Warm water
- Baking soda
- Grease
- Conventional wrench (for terminal clamp bolts)

Maintenance type batteries—

**Parts (if level is low):**

- Distilled water

**Tools:**

- Warm water
- Baking soda
- Grease
- Conventional wrench (for terminal clamp bolts)
- Coin (for vent plugs)
- Funnel (only for adding distilled water)

**Checking and replacing fuses**

**Parts (if replacement is necessary):**

- Fuse with same amperage rating as original

**Tools:**

- Conventional wrench (for instrument lower panel nut)

**Adding washer fluid**

**Parts:**

- Water
- Washer fluid containing antifreeze (for winter use)

**Tools:**

- Funnel

**Replacing light bulbs**

**Parts:**

- Bulb with same number and wattage rating as original (See charts in ”Replacing light bulbs” in Chapter 7-3.)

**Tools:**

- Screwdriver
- Conventional wrench

# Part 7
# DO- IT- YOURSELF MAINTENANCE–

## Chapter 7- 2
## Engine and Chassis


- Checking the engine oil level
- Checking the engine coolant level
- Checking brake fluid
- Checking power steering fluid
- Checking tire pressure
- Checking and replacing tires
- Rotating tires
- Installing snow tires and chains
- Replacing wheels


### Checking the engine oil level

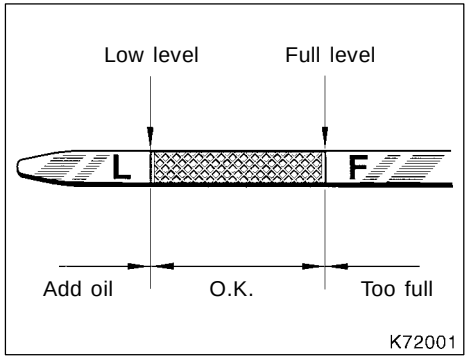


**With the engine at operating temperature and turned off, check the oil level on the dipstick.**

1. To get a true reading, the vehicle should be on a level spot. After turning off the engine, wait a few minutes for the oil to drain back into the bottom of the engine.
2. Pull out the dipstick, and wipe it clean with a rag.
3. Reinsert the dipstick–push it in as far as it will go, or the reading will not be correct.
4. Pull the dipstick out and look at the oil level on the end.

**If the oil level is below or only slightly above the low level, add engine oil of the same type as already in the engine.**

Remove the oil filler cap and add engine oil in small quantities at a time, checking the dipstick.

The approximate quantity of oil needed to fill between the low level and the full level on the dipstick is indicated below for reference.

When the level reaches within the correct range, install the filler cap hand- tight.

Oil quantity, L (qt., Imp. qt.):

1.3 (1.4, 1.1)

**NOTICE**

- ***Avoid overfilling, or the engine could be damaged.***
- ***Check the oil level on the dipstick once again after adding the oil.***

**Engine oil selection**

Use API grade SJ, ”Energy- Conserving” ILSAC multigrade engine oil.

Recommended viscosity (SAE):

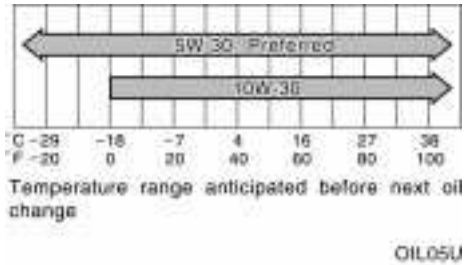


**SAE 5W- 30 is the best choice for your vehicle, for good fuel economy, and good starting in cold weather.**

**If you use SAE 10W- 30 engine oil in extremely low temperatures, the engine may become difficult to start, so SAE 5W- 30 engine oil is recommended.**

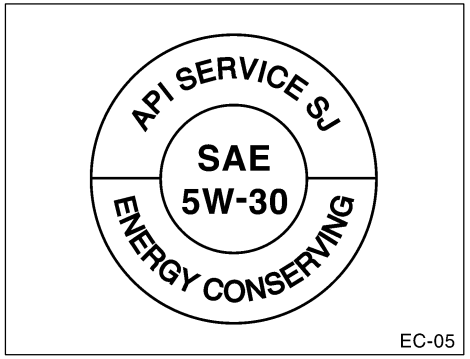


**API service symbol**

**ILSAC certification mark**

**Oil identification marks**

**Either or both API registered marks are added to some oil containers to help you select the oil you should use.**

The API Service Symbol is located anywhere on the outside of the container.

The top portion of the label shows the oil quality by API (American Petroleum Institute) designations such as SJ. The center portion of the label shows the SAE viscosity grade such as SAE 5W- 30. ”Energy-Conserving” shown in the lower portion, indicates that the oil has fuel- saving capabilities.

The ILSAC (International Lubricant Standardization and Approval Committee) Certification Mark is displayed on the front of the container.

## Checking the engine coolant level

**Look at the see-through coolant reservoir when the engine is cold. The coolant level is satisfactory if it is between the ”FULL” and ”LOW” lines on the reservoir. If the level is low, add ethylene-glycol type coolant for a proper corrosion protection of aluminum components.**

The coolant level in the reservoir will vary with engine temperature. However, if the level is on or below the ”LOW” line, add coolant. Bring the level up to the ”FULL” line.

Always use ethylene-glycol type coolant for a proper corrosion protection of aluminum components. See information in the next column.

If the coolant level drops within a short time after replenishing, there may be a leak in the system. Visually check the radiator, hoses, radiator cap and drain cock and water pump.

If you can find no leak, have your Toyota dealer test the cap pressure and check for leaks in the cooling system.

**⚠ CAUTION**

**To prevent burning yourself, do not remove the radiator cap when the engine is hot.**

### Coolant type selection

Use of improper coolants may damage your engine cooling system. Your coolant must contain ethylene-glycol type coolant for a proper corrosion protection of your engine that contains aluminum components. Use ”Toyota Long Life Coolant” or equivalent.

In addition to preventing freezing and subsequent damage to the engine, this type of coolant will also prevent corrosion. Further supplemental inhibitors or additives are neither needed nor recommended.

Read the coolant container for information on freeze protection. Follow the manufacturer’s directions for how much to mix with plain water (preferably demineralized water or distilled water). The total capacity of the cooling system is given in Part 8.

We recommend to use 50% solution for your Toyota, to provide protection down to about -35°C (-31°F). When it is extremely cold, to provide protection down to about -50°C (-58°F), 60% solution is recommended. Do not use more than 70% solution for better coolant performance.

***NOTICE***

***Do not use alcohol type antifreeze or plain water alone.***

## Checking brake fluid

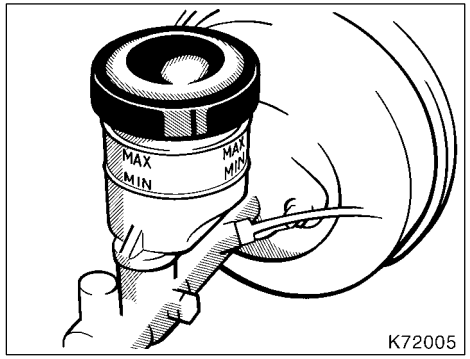


**Type A**

**Type B**

**To check the fluid level, simply look at the see-through reservoir. The level should be between the ”MAX” and ”MIN” lines on the reservoir.**

It is normal for the brake fluid level to go down slightly as the brake pads wear. So be sure to keep the reservoir filled.

If the reservoir needs frequent refilling, it may indicate a serious mechanical problem.

**If the level is low, add SAE J1703 or FMVSS No.116 DOT 3 brake fluid to the brake reservoir.**

Remove and replace the reservoir cover by hand. Fill the brake fluid to the dotted line. This brings the fluid to the correct level when you put the cover back on.

Use only newly opened brake fluid. Once opened, brake fluid absorbs moisture from the air, and excess moisture can cause a dangerous loss of braking.

**⚠ CAUTION**

**Take care when filling the reservoir because brake fluid can harm your eyes and damage painted surfaces. If fluid gets in your eyes, flush your eyes with clean water.**

***NOTICE***

***If you spill the fluid, be sure to wash it off with water to prevent it from damaging the parts or paint.***

## Checking power steering fluid

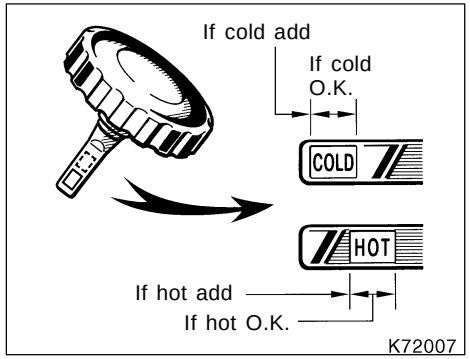


**Check the fluid level on the dipstick. If necessary, add automatic transmission fluid DEXRON®II or III.**

If the vehicle has been driven around 80 km/h (50 mph) for 20 minutes (a little more in frigid temperatures), the fluid is hot (60°C—80°C or 140°F—175°F). You may also check the level when the fluid is cold (about room temperature, 10°C—30°C or 50°F—85°F) if the engine has not been run for about five hours.

a. Clean all dirt from outside of the reservoir tank.

b. Remove the filler cap by turning it counterclockwise and wipe the dipstick clean.

c. Reinstall the filler cap.

d. Remove the filler cap again and look at the fluid level. If the fluid is cold, the level should be in the ”COLD” range on the dipstick. Similarly, if it is hot, the fluid level should be in the ”HOT” range. If the level is at the low side of either range, add automatic transmission fluid DEXRON®II or III to bring the level within the range.

e. After replacing the filler cap, visually check the steering box case, vane pump and hose connections for leaks or damage.

**⚠ CAUTION**

**The reservoir tank may be hot so be careful not to burn yourself.**

***NOTICE***

***Avoid overfilling, or the power steering could be damaged.***

## Checking tire pressure

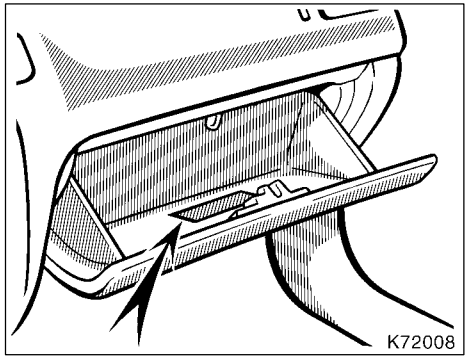


**Keep your tire pressures at the proper level.**

The recommended cold tire pressures, tire size and the vehicle capacity weight are given in Part 8. They are also on the tire pressure label as shown.

You should check the tire pressures every two weeks, or at least once a month. And do not forget the spare!

**Incorrect tire pressure can reduce tire life and make your vehicle less safe to drive.**

Low tire pressure results in excessive wear, poor handling, reduced fuel economy, and the possibility of blowouts from overheated tires. Also, low tire pressure can cause poor sealing of the tire bead. If the tire pressure is excessively low, there is the possibility of wheel deformation and/or tire separation.

High tire pressure produces a harsh ride, handling problems, excessive wear at the center of the tire tread, and a greater possibility of tire damage from road hazards.

If a tire frequently needs refilling, have it checked by your Toyota dealer.

**The following instructions for checking tire pressure should be observed:**

- **The pressure should be checked only when the tires are cold.** If your vehicle has been packed for at least 3 hours and has not been driven for more than 1.5 km or 1 mile since, you will get an accurate cold tire pressure reading.
- **Always use a tire pressure gauge.** The appearance of a tire can be misleading. Besides, tire pressures that are even just a few pounds off can degrade handling and ride.
- **Take special care when adding air to the compact spare tire.** The smaller tire size can gain pressure very quickly. Add compressed air in small quantities and check the pressure often until it reaches the specified pressure.
- **Do not bleed or reduce tire pressure after driving.** It is normal for the tire pressure to be higher after driving.
- **Never exceed the vehicle capacity weight.** The passenger and luggage weight should be located so that the vehicle is balanced.
- **Be sure to reinstall the tire inflation valve caps.** Without the valve caps, dirt or moisture could get into the valve core and cause air leakage. If the caps have been lost, have new ones put on as soon as possible.

## Checking and replacing tires

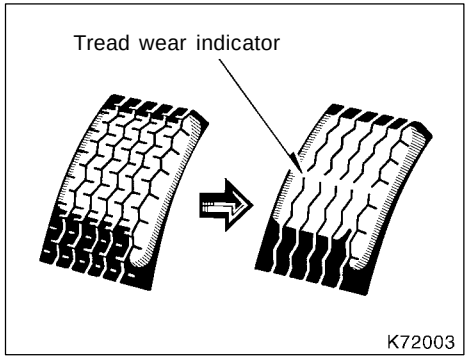


### CHECKING YOUR TIRES

**Check the tire tread for the tread wear indicators. If the indicators show, replace the tires.**

The tires on your Toyota have built-in tread wear indicators to help you know when the tires need replacement. When the tread depth wears to 1.6 mm (0.06 in.) or less, the indicators will appear. If you can see the indicators in two or more adjacent grooves, the tire should be replaced. The lower the tread, the higher the risk of skidding.

**The effectiveness of snow tires is lost if the tread wears down below 4 mm (0.16 in.).**

**Check the tires regularly for damage such as cuts, splits and cracks. If any damage is found, consult with a technician and have the tire repaired or replaced.**

Even if the damage does not appear serious, a qualified technician should examine the damage. Objects which have penetrated the tire may have caused internal damage.

**Any tires which are over six years old must be checked by a qualified technician even if damage is not obvious.**

Tires deteriorate with age even if they have never or seldom been used.

This also applies to the spare tire and tires stored for future use.

**REPLACING YOUR TIRES**

**When replacing a tire, use only the same size and construction as originally installed and with the same or greater load capacity.**

Using any other size or type of tire may seriously affect handling, ride, speedometer/odometer calibration, ground clearance, and clearance between the body and tires or snow chains.

**⚠ CAUTION**

- **Do not mix radial, bias belted, or bias-ply tires on your vehicle. It can cause dangerous handling characteristics, resulting in loss of control.**
- **Do not use tires or wheels other than the manufacturer’s recommended size.**

**Toyota recommends all four tires, or at least both of the front or rear tires be replaced at a time as a set.**

See ”If you have a flat tire” in Part 4 for tire change procedure.

**When a tire is replaced, the wheel should always be balanced.**

An unbalanced wheel may affect vehicle handling and tire life. Wheels can get out of balance with regular use and should therefore be balanced occasionally.

**When replacing a tubeless tire, the air valve should also be replaced with a new one.**

## Rotating tires

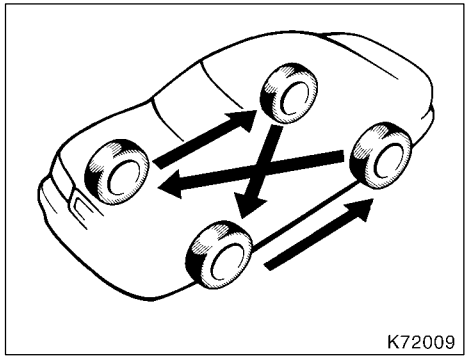


**To equalize tire wear and help extend tire life, Toyota recommends that you rotate your tires approximately every 12000 km (7500 miles). However, the most appropriate timing for tire rotation may vary according to your driving habits and road surface conditions.**

See ”If you have a flat tire” in Part 4 for tire change procedure.

When rotating tires, check for uneven wear and damage. Abnormal wear is usually caused by incorrect tire pressure, improper wheel alignment, out-of-balance wheels, or severe braking.

**⚠ CAUTION**

**Do not include a compact spare tire when rotating the tires. It is designed for temporary use only.**

## Installing snow tires and chains

**WHEN TO USE SNOW TIRES OR CHAINS**

**Snow tires or chains are recommended when driving on snow or ice.**

On wet or dry roads, conventional tires provide better traction than snow tires.

**SNOW TIRE SELECTION**

**If you need snow tires, select the same size, construction and load capacity as the original tires on your Toyota.**

Do not use tires other than those mentioned above. Do not install studded tires without first checking local regulations for possible restrictions.

**SNOW TIRE INSTALLATION**

**Snow tires should be installed on all wheels.**

Installing snow tires on the front wheels only can lead to an excessive difference in road grip capability between the front and rear tires which could cause loss of vehicle control.

When storing removed tires, you should store them in a cool dry place.

Mark the direction of rotation and be sure to install them in the same direction when replacing.

**⚠ CAUTION**

- **Do not drive with the snow tires incorrectly inflated.**
- **Never drive over 120 km/h (75 mph) with any type of snow tires.**

**TIRE CHAIN SELECTION**

**Use the tire chains of correct size and type.**

Use SAE Class ”S” type radial tire chains except radial cable chains or V-bar type chains.

**Regulations regarding the use of tire chains vary according to location or type of road, so always check them before installing chains.**

**CHAIN INSTALLATION**

**Install the chains on the front tires as tightly as possible. Do not use tire chains on the rear tires. Retighten chains after driving 0.5—1.0 km (1/4—1/2 mile).**

When installing chains on your tires, carefully follow the instructions of the chain manufacturer.

If wheel covers are used, they will be scratched by the chain band, so remove the covers before putting on the chains.

**⚠ CAUTION**

- **Do not exceed 50 km/h (30 mph) or the chain manufacturer’s recommended speed limit, whichever is lower.**
- **Drive carefully avoiding bumps, holes, and sharp turns, which may cause the vehicle to bounce.**
- **Avoid sharp turns or locked-wheel braking, as use of chains may adversely affect vehicle handling.**

***NOTICE***

***Do not attempt to use a tire chain on the compact spare tire, as it may result in damage to the vehicle as well as the tire.***

## Replacing wheels

### WHEN TO REPLACE YOUR WHEELS

**If you have wheel damage such as bending, cracks or heavy corrosion, the wheel should be replaced.**

If you fail to replace damaged wheels, the tire may slip off the wheel or they may cause loss of handling control.

### WHEEL SELECTION

**When replacing wheels, care should be taken to ensure that the wheels are replaced by ones with the same load capacity, diameter, rim width, and offset.**

This must be observed on compact spare tires, too.

Correct replacement wheels are available at your Toyota dealer.

A wheel of a different size or type may adversely affect handling, wheel and bearing life, brake cooling, speedometer/odometer calibration, stopping ability, headlight aim, bumper height, vehicle ground clearance, and tire or snow chain clearance to the body and chassis.

Replacement with used wheels is not recommended as they may have been subjected to rough treatment or high mileage and could fail without warning. Also, bent wheels which have been straightened may have structural damage and therefore should not be used. Never use an inner tube in a leaking wheel which is designed for a tubeless tire.

# Part 7
# DO- IT- YOURSELF MAINTENANCE —

## Chapter 7- 3
## Electrical components

- Checking battery condition
- Battery recharging precautions
- Checking and replacing fuses
- Adding washer fluid
- Replacing light bulbs

### Checking battery condition——Precautions

**⚠ CAUTION**

**BATTERY PRECAUTIONS**

**The battery produces flammable and explosive hydrogen gas.**

- **Do not cause a spark from the battery with tools.**
- **Do not smoke or light a match near the battery.**

**The electrolyte contains poisonous and corrosive sulfuric acid.**

- **Avoid contact with eyes, skin or clothes.**
- **Never ingest electrolyte.**
- **Wear protective safety glasses when working near the battery.**
- **Keep children away from the battery.**

**EMERGENCY MEASURES**

- **If electrolyte gets in your eyes, flush your eyes with clean water immediately and get immediate medical attention. If possible, continue to apply water with a sponge or cloth while en route to the medical office.**
- **If electrolyte gets on your skin, thoroughly wash the contact area. If you feel pain or burning, get medical attention immediately.**
- **If electrolyte gets on your clothes, there is a possibility of its soaking through to your skin, so immediately take off the exposed clothing and follow the procedure above, if necessary.**
- **If you happen to swallow electrolyte, drink a large quantity of water or milk. Follow with milk of magnesia, beaten raw egg or vegetable oil. Then go immediately for emergency help.**

## —Checking battery exterior

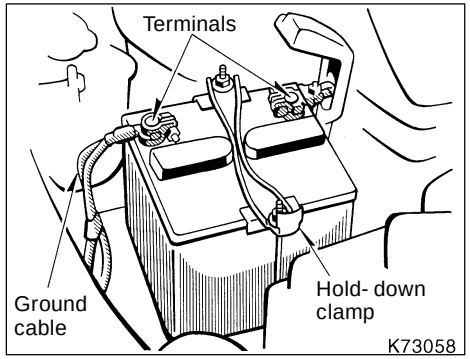


**Check the battery for corroded or loose terminal connections, cracks, or loose hold- down clamp.**

a. If the battery is corroded, wash it off with a solution of warm water and baking soda. Coat the outside of the terminals with grease to prevent further corrosion.

b. If the terminal connections are loose, tighten their clamp nuts—but do not over-tighten.

c. Tighten the hold- down clamp only enough to keep the battery firmly in place. Overtightening may damage the battery case.

**NOTICE**

- ***Be sure the engine and all accessories are off before performing maintenance.***
- ***When checking the battery, remove the ground cable from the negative terminal (”- ” mark) first and reinstall it last.***
- ***Be careful not to cause a short circuit with tools.***
- ***Take care no solution gets into the battery when washing it.***

## —Checking battery fluid

**There are two types of batteries: maintenance type and non- maintenance type.**

A non- maintenance battery has ”MAINTENANCE FREE BATTERY” on its top. A maintenance type battery does not have such indication.

Maintenance type battery—

Check the fluid condition by the fluid level lines on the side of the battery.

Non- maintenance battery—

Check the battery condition by the hydrometer on the top of the battery.

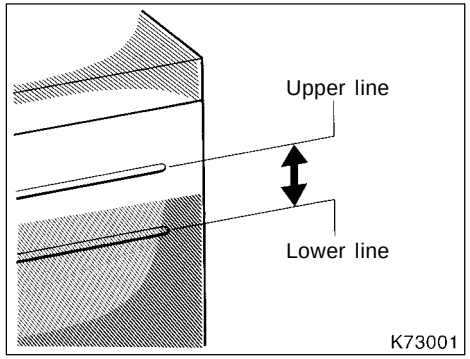


**CHECKING BY THE FLUID LEVEL LINES (MAINTENANCE TYPE BATTERY ONLY)**

**The fluid (electrolyte) level must be between the upper and lower lines.**

When checking the fluid level, look at all six cells, not just one or two.

If the level is lower than the lower line, add distilled water. (See ”ADDING DISTILLED WATER”.)

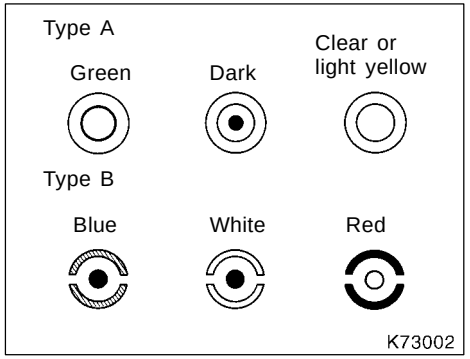


**CHECKING BY THE HYDROMETER (NON- MAINTENANCE BATTERY ONLY)**

**Check the battery condition by the hydrometer color.**

| Hydrometer color | | Condition |
|---|---|---|
| Type A | Type B | |
| GREEN | BLUE | Good |
| DARK | WHITE | Charging necessary. Have battery checked by your Toyota dealer. |
| CLEAR or LIGHT YELLOW | RED | Have battery checked by your Toyota dealer. |

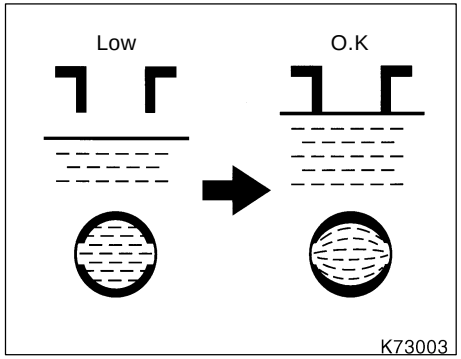


**ADDING DISTILLED WATER (MAINTENANCE TYPE BATTERY ONLY)**

1. Remove the vent plugs.
2. Add distilled water to cells needing fluid.

If the side of your battery is covered, check the water level by looking down directly above the cell as illustrated above.

3. Retighten the vent plugs securely.

**NOTICE**

***Do not overfill the cells. Excess electrolyte could squirt out of the battery during heavy charging, causing corrosion or damage.***

## Battery recharging precautions

**During recharging, the battery is producing hydrogen gas.**

Therefore, before recharging:

1. Maintenance type batteries—Remove the vent plugs.
2. If recharging with the battery installed on the vehicle, be sure to disconnect the ground cable.
3. Be sure the power switch on the recharger is off when connecting the charger cables to the battery and when disconnecting them.

**⚠ CAUTION**

- **Always charge the battery in an unconfined area. Do not charge the battery in a garage or closed room where there is not sufficient ventilation.**
- **Non- maintenance batteries: Only do a slow charge (5 A or less). Charging at a quicker rate is dangerous. The battery may explode, causing personal injuries.**

  **Maintenance type batteries: Be sure to remove the vent plugs before recharging.**

**NOTICE**

***Never recharge the battery while the engine is running. Also, be sure all accessories are turned off.***

## Checking and replacing fuses

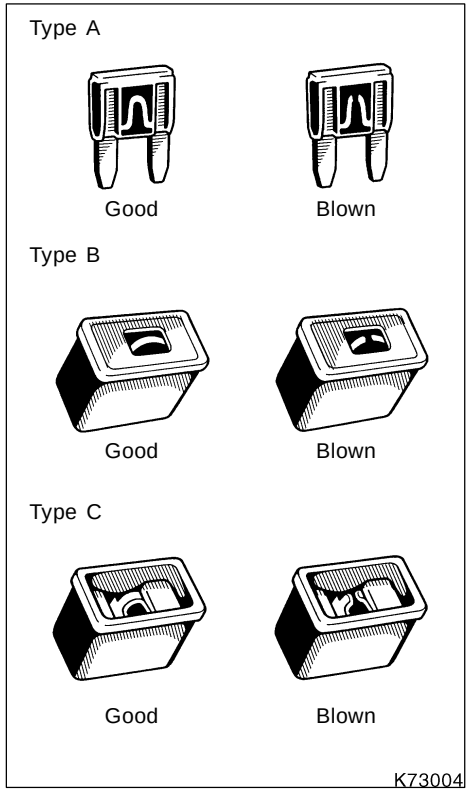


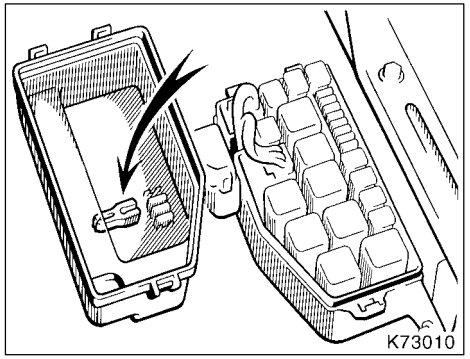


**If the headlights or other electrical components do not work, check the fuses. If any of the fuses are blown, they must be replaced.**

See ”Fuse locations” in Chapter 7-1 for locations of the fuses.

**Turn the ignition switch and inoperative component off. Pull a suspected fuse straight out and check it.**

Determine which fuse may be causing the problem. The lid of the fuse box shows the name of the circuit for each fuse. See Part 8 of this manual for the functions controlled by each circuit.

Type A fuses can be pulled out by using the pull-out tool. The location of the pull-out tool is shown in the illustration.

If you are not sure whether the fuse has blown, try replacing the suspected fuse with one that you know is good.

**If the fuse has blown, push a new fuse into the clip.**

Only install a fuse with the amperage rating designated on the fuse box lid.

If you do not have a spare fuse, in an emergency you can pull out the ”DOME” or ”A/C” fuse, which may be dispensable for normal driving, and use it if its amperage rating is the same.

If you cannot use one of the same amperage, use one that is lower, but as close as possible to the rating. If the amperage is lower than that specified, the fuse might blow out again but this does not indicate anything wrong. Be sure to get the correct fuse as soon as possible and return the substitute to its original clip.

It is a good idea to purchase a set of spare fuses and keep them in your vehicle for emergencies.

If the new fuse immediately blows out, there is a problem with the electrical system. Have your Toyota dealer correct it as soon as possible.

**CAUTION**

**Never use a fuse with a higher amperage rating, or any other object, in place of a fuse. This may cause extensive damage and possibly a fire.**

## Adding washer fluid

**If any washer does not work, the washer tank may be empty. Add washer fluid.**

You may use plain water as washer fluid. However, in cold areas where temperatures range below freezing point, use washer fluid containing antifreeze. This product is available at your Toyota dealer and most auto parts stores. Follow the manufacturer’s directions for how much to mix with water.

***NOTICE***

***Do not use engine antifreeze or any other substitute because it may damage your vehicle’s paint.***

## Replacing light bulbs—

The following illustrations show how to gain access to the bulbs. When replacing a bulb, make sure the ignition switch and light switch are off. Use bulbs with the wattage ratings given in the table.

**CAUTION**

**Halogen bulbs have pressurized gas inside and require special handling. They can burst or shatter if scratched or dropped. Hold a bulb only by its plastic or metal case. Do not touch the glass part of a bulb with bare hands.**

***NOTICE***

***Only use a bulb of the listed type.***

| Light bulbs | Bulb No. | W | Type |
|---|---|---|---|
| Headlights | HB2 | 60/55 | A |
| Parking, front side marker and front turn signal lights | 1157 | 27/8 | B |
| Rear side marker lights | 168 | 5 | C |
| Rear turn signal lights | PY 21W | 21 | D |
| Stop and tail lights | W21/ 5W | 21/5 | C |
| Back-up lights | W21W | 21 | C |
| License plate lights | — | 5 | C |
| High mounted stoplight | 921 | 18 | C |
| Interior light | — | 8 | E |
| Trunk light | 194 | 3.8 | C |

A: HB2 halogen bulbs
B: Single end bulbs
C: Wedge base bulbs
D: Single end bulbs (amber)
E: Double end bulbs

## —Headlights

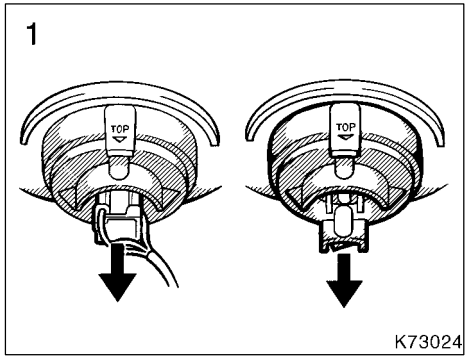


**1. Open the hood. Unplug the connector. Remove the rubber cover.**

If the connector is tight, wiggle it.

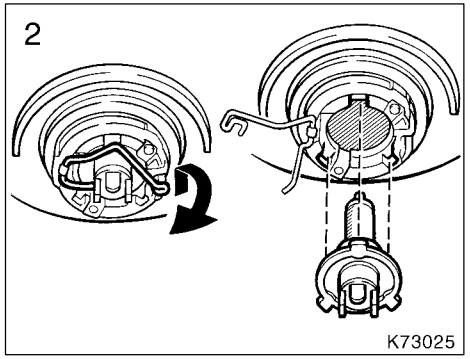


**2. Release the bulb retaining spring and remove the bulb. Install a new bulb and the bulb retaining spring.**

To install a bulb, align the tabs of the bulb with the cutouts of the mounting hole.

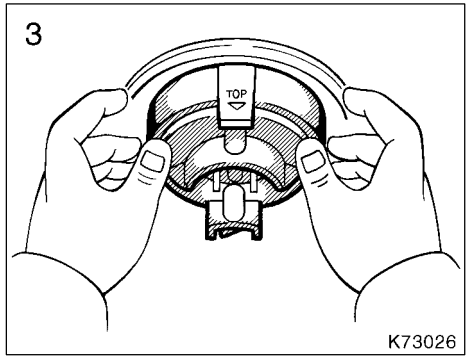


**3. Install the rubber cover with the ”TOP” mark upward, and snuggle on the boss. Insert the connector. Then install the plastic cover.**

Make sure the rubber cover fits snugly on the connector and the headlight body.

Aiming is not necessary after replacing the bulb. When aiming adjustment is necessary, contact your Toyota dealer.

## —Parking, front side marker and front turn signal lights

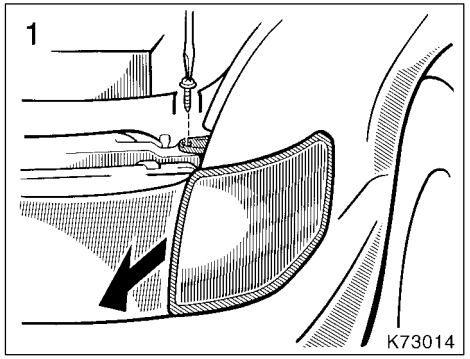


**Use a Phillips- head screwdriver.**

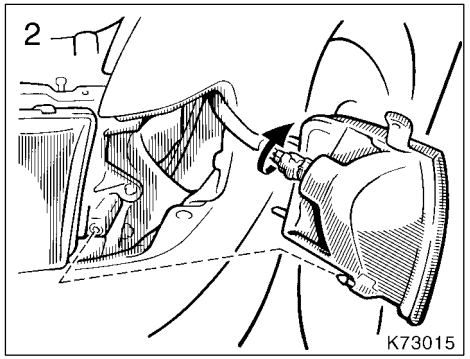


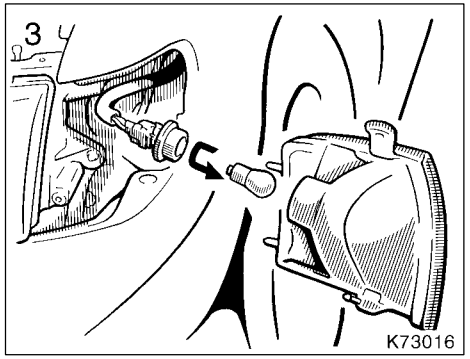

**—Rear side marker, rear turn signal, stop and tail, and back-up lights**

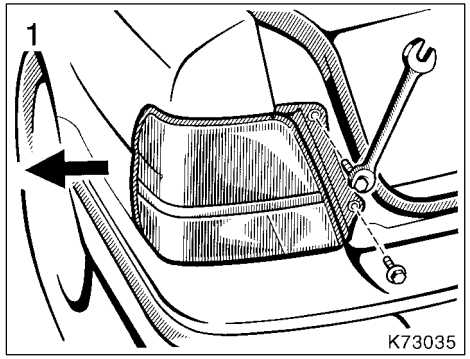


**Use a wrench.**

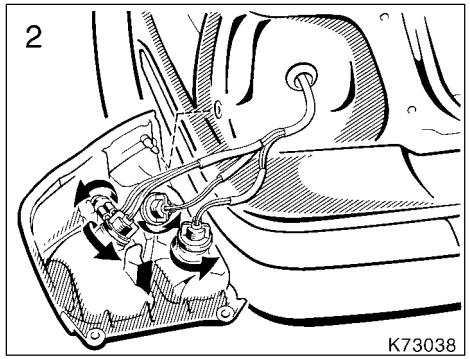


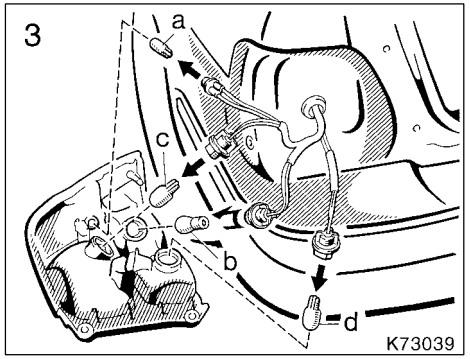


**a: Rear side marker light**
**b: Rear turn signal light**
**c: Stop and tail light**
**d: Back-up light**

**—License plate lights**

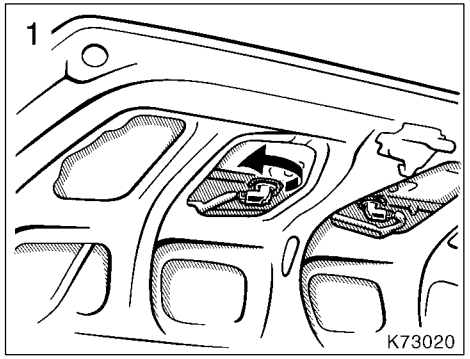


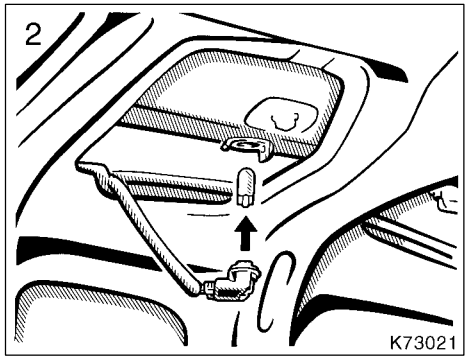

**—High mounted stoplight**

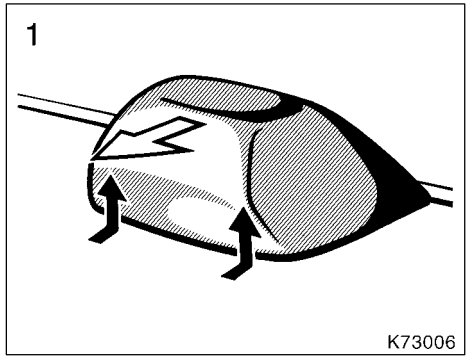


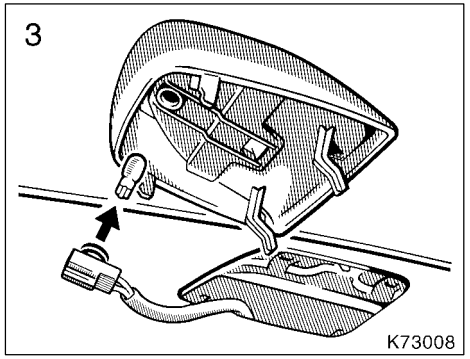


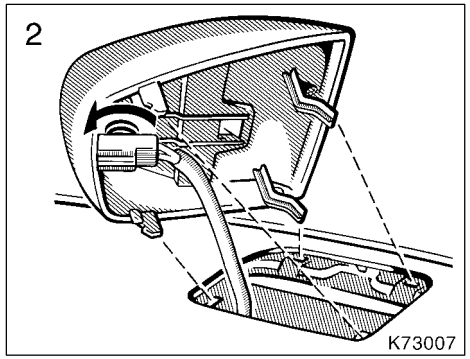

# Part 8
# SPECIFICATIONS


- Dimensions and weight
- Engine
- Fuel
- Service specifications
- Tires
- Fuses


## Dimensions and weight

| | | | |
|---|---|---|---|
| Overall length | mm (in.) | 4130 | (162.6) |
| Overall width | mm (in.) | 1660 | ( 65.4) |
| Overall height | mm (in.) | 1375 | ( 54.1)* |
| Wheelbase | mm (in.) | 2380 | ( 93.7) |
| Front tread | mm (in.) | 1400 | ( 55.1) |
| Rear tread | mm (in.) | 1395 | ( 54.9) |
| Vehicle capacity weight (occupants + luggage) | kg (lb.) | 352 | (775) |

*: Unladen vehicle

## Engine

Model:
5E- FE

Type:
4 cylinder in line, 4 cycle, gasoline

Bore and stroke, mm (in.):
74.0 × 87.0 (2.91 × 3.43)

Displacement, $cm^3$ (cu. in.):
1497 (91.3)

## Fuel

Fuel type:

Unleaded gasoline, Octane Rating 87 (Research Octane Number 91) or higher

Fuel tank capacity, L (gal., Imp. gal.):
45 (11.9, 9.9)

## Service specifications

**ENGINE**

Valve clearance (engine cold), mm (in.):

| | |
|---|---|
| Intake | 0.15—0.25 (0.006—0.010) |
| Exhaust | 0.31—0.41 (0.012—0.016) |

Spark plug type:

| | |
|---|---|
| DENSO | K16TR11 |
| NGK | BKR5EKB11 |

Spark plug gap, mm (in.):
1.1 (0.043)

Drive belt tension measured with Borroughs drive belt tension gauge No.BT-33-73F (used belt), lbf:
100 ± 20

**ENGINE LUBRICATION**

Oil capacity (drain and refill), L (qt., Imp. qt.):

| | |
|---|---|
| With filter | 2.8 (3.0, 2.5) |
| Without filter | 2.6 (2.7, 2.3) |

Oil grade:

API grade SJ, ”Energy-Conserving” or ILSAC multigrade engine oil is recommended.

Recommended oil viscosity (SAE):

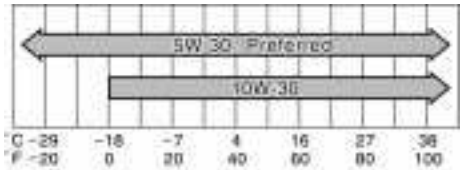


Temperature range anticipated before next oil change

OIL05U

**COOLING SYSTEM**

Total capacity, L (qt., Imp. qt.):

Automatic transmission
Vehicles sold in Puerto Rico
4.8 (5.1, 4.2)
Vehicles sold outside Puerto Rico
5.3 (5.6, 4.7)

Manual transmission
4.9 (5.2, 4.3)

Coolant type:
”Toyota Long Life Coolant” or equivalent

With ethylene-glycol type coolant for a proper corrosion protection of aluminum components

Do not use alcohol type antifreeze or plain water alone.

**BATTERY**

—Maintenance type battery
Specific gravity reading at 20°C(68°F):

| | |
|---|---|
| 1.250—1.290 | Fully charged |
| 1.160—1.200 | Half charged |
| 1.060—1.100 | Discharged |

—Non−maintenance battery
Open voltage* at 20°C (68°F):

| | |
|---|---|
| 12.6 V—12.8 V | Fully charged |
| 12.2 V—12.4 V | Half charged |
| 11.8 V—12.0 V | Discharged |

*: Voltage that is checked 20 minutes after the key is removed with all the lights turned off

Charging rates:

| | |
|---|---|
| Non−maintenance battery | 5 A max. |
| Maintenance type battery | |
| Quick charge | 15 A max. |
| Slow charge | 5 A max. |

**CLUTCH**

Pedal freeplay, mm (in.):
5—15 (0.2—0.6)

Fluid type:
SAE J1703 or FMVSS No.116 DOT 3

**MANUAL TRANSAXLE**

Oil capacity, L (qt., Imp. qt.):
1.9 (2.0, 1.7)

Oil type:
Gear oil API GL-4 or GL-5

Recommended oil viscosity:
SAE 75W-90

**AUTOMATIC TRANSAXLE**

3-speed type automatic transmission

Automatic transmission
Fluid capacity (drain and refill), L (qt., Imp. qt.):
Up to 2.5 (2.6, 2.2)

Differential
Fluid capacity, L (qt., Imp. qt.):
1.4 (1.5, 1.2)

4-speed type automatic transmission
Fluid capacity (drain and refill), L (qt., Imp. qt.):
Up to 3.1 (3.3, 2.7)

Fluid type:
Automatic transmission fluid D-II or DEXRON®III (DEXRON®II)

**BRAKES**

Minimum pedal clearance when depressed with the pressure of 490 N (50 kgf, 110 lbf) with the engine running, mm (in.):

With anti-lock brake system
55 (2.2)
Without anti-lock brake system
60 (2.4)

Pedal freeplay, mm (in.):
1—6 (0.04—0.24)

Pad wear limit, in. (mm):
1.0 (0.04)

Lining wear limit, in. (mm):
1.0 (0.04)

Parking brake adjustment when pulled with the force of 196 N (20 kgf, 44 lbf):
5—8 clicks

Fluid type:
SAE J1703 or FMVSS No.116 DOT 3

**STEERING**

Wheel freeplay:
Less than 30 mm (1.2 in.)

Power steering fluid type:
Automatic transmission fluid DEXRON®II or III

## Tires

**Tire size:**

Spare tire
T115/70D14 88M
T105/70D14 83M
Except spare tire
155SR13 (155/80R 79S)
P185/60R14 82H
P175/65R14 81S

**Tire pressure, kPa (kgf/cm$^2$ or bar, psi):**

Spare tire
420 (4.2, 60)
Except spare tire
155SR13 (155/80R 79S)
Front 240 (2.4, 34)
Rear 220 (2.2, 32)
P185/60R14 82H
180 (1.8, 26)
P175/65R14 81S
200 (2.0, 28)

**Wheel size:**

| | |
|---|---|
| Spare tire | 14 × 4T |
| Except spare tire | |
| 155 SR13 | 13 × 4 1/2J |
| P185/60R14 82H | 14 × 5 1/2J |
| P175/65R14 81S | 14 × 5 1/2J |

**Wheel nut torque, N·m (kgf·m, ft·lbf):**

103 (10.5, 76)

## Fuses

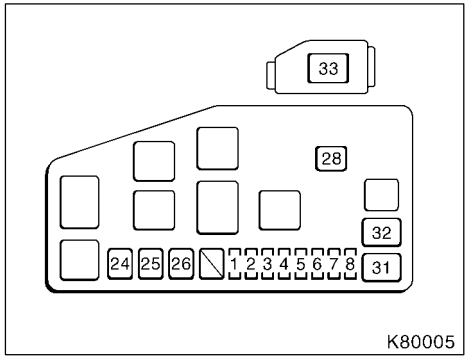


**Engine compartment (U.S.A.)**

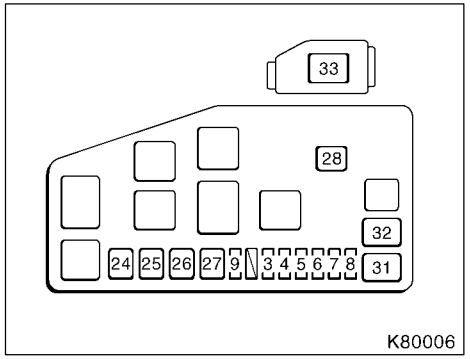


**Engine compartment (Canada)**

**Fuses (type A)**

1. **HEAD (LH) 10 A:** Left-hand headlight
2. **HEAD (RH) 10 A:** Right-hand headlight
3. **AM2 15 A:** Ignition system, charging system, multiport fuel injection system/sequential multiport fuel injection system, SRS airbag system, seat belt pretensioners, starter system
4. **HAZ-HORN 15 A:** Horns, emergency flashers, theft deterrent system
5. **EFI 15 A:** Multiport fuel injection system/sequential multiport fuel injection system
6. **DOME 10 A:** Interior lights, open door warning light, clock, car audio system, theft deterrent system, daytime running light system
7. **OBD-II 7.5 A:** On-board diagnosis system
8. **ALT-S 5 A:** Charging system
9. **DRL 5 A:** Daytime running light system
10. **HEAD (RH-LWR) 10 A:** Right-hand headlight (low beam)
11. **HEAD (LH-LWR) 10 A:** Left-hand headlight (low beam)
12. **HEAD (RH-UPR) 10 A:** Right-hand headlight (high beam)

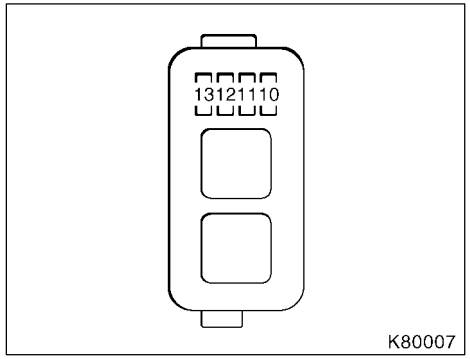


**Engine compartment (Canada only)**

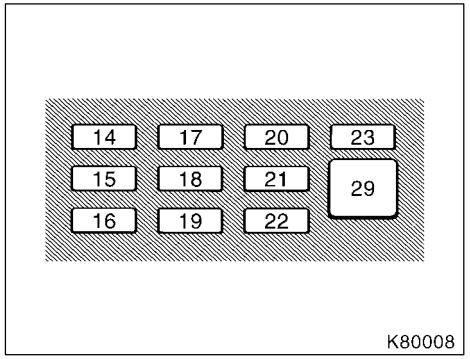


**Instrument panel**

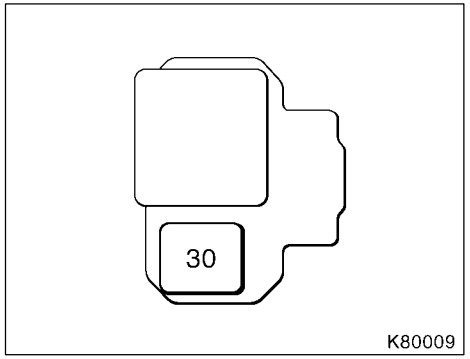


**Instrument panel**

13. **HEAD (LH-UPR) 10 A:** Left-hand headlight (high beam)
14. **STOP 10 A:** Stop lights, high mounted stoplight, anti-lock brake system, shift lock control system
15. **A/C 10 A:** Air conditioning system
16. **TAIL 15 A:** Tail lights, parking lights, license plate lights, instrument panel lights, air conditioning system, emergency flashers, air conditioning system, rear window defogger, car audio system, cigarette lighter, clock
17. **GAUGE 10 A:** Gauge and meters, service reminder indicator (except headlight high beam indicator) and warning buzzers (except discharge, open door and SRS warning lights), back-up lights, rear window defogger, power windows
18. **TURN 7.5 A:** Turn signal lights
19. **WIPER 20 A:** Windshield wipers and washer
20. **ECU-IG 5 A:** Anti-lock brake system, air conditioning system, shift lock control system, daytime running light system
21. **CIG&RADIO 15 A:** Cigarette lighter, car audio system, clock, theft deterrent system, shift lock control system, SRS airbag system, seat belt pretensioners
22. **IGN 5 A:** Charging system, discharge warning light, multiport fuel injection system/sequential multiport fuel injection system, SRS airbag system, seat belt pretensioners
23. **ECU-B 5 A:** SRS airbag warning light

**Fuses (type B)**

24. **CDS FAN 30 A:** Electric cooling fans
25. **RAD FAN 30 A:** Electric cooling fans

26. **HEATER 40 A:** Air conditioning system, ‘‘A/C’’ fuses
27. **DIMMER 30 A:** ”HEAD RL (LWR)”, ”HEAD LL (LWR)”, ”HEAD RH (UPR)” and ”HEAD LH (UPR)” fuses
28. **MAIN 30 A:** Starter system
29. **DEF 30 A:** Rear window defogger
30. **PWR 30 A:** Power windows, power door lock system

**Fuses (type C)**

31. **ABS 60 A:** Anti-lock brake system
32. **AM1 50 A:** ”DEF”, ”WIPER”, ”GAUGE”, ”ECU-IG”, ”TURN”, ”IGN”, ”PWR” and ”CIG&RADIO” fuses
33. **ALT 100 A:** ”ABS”, ”STOP”, ”TAIL”, ”ECU-B”, ”DEF”, ”AM1”, ”WIPER”, ”GAUGE”, ”ECU-IG”, ”TURN”, ”PWR” and ”CIG&RADIO” fuses

# Part 9
# REPORTING SAFETY DEFECTS FOR U.S. OWNERS AND UNIFORM TIRE QUALITY GRADING


- Reporting safety defects for U.S. owners
- Uniform tire quality grading


## Reporting safety defects for U.S. owners

If you believe that your vehicle has a defect which could cause a crash or could cause injury or death, you should immediately inform the National Highway Traffic Safety Administration (NHTSA) in addition to notifying Toyota Motor Sales, U.S.A., Inc.
(Toll- free: 1- 800- 331- 4331).

If NHTSA receives similar complaints, it may open an investigation, and if it finds that a safety defect exists in a group of vehicles, it may order a recall and remedy campaign. However, NHTSA cannot become involved in individual problems between you, your dealer, or Toyota Motor Sales, U.S.A., Inc.

To contact NHTSA, you may either call the Auto Safety Hotline toll- free at 1- 800- 424- 9393 (or 366- 0123 in Washington, D.C. area) or write to: NHTSA. U.S. Department of Transportation. Washington, D.C. 20590. You can also obtain other information about motor vehicle safety from the Hotline.

## Uniform tire quality grading

This information has been prepared in accordance with regulations issued by the National Highway Traffic Safety Administration of the U.S. Department of Transportation. It provides the purchasers and/or prospective purchasers of Toyota vehicles with information on uniform tire quality grading.

Your Toyota dealer will help answer any questions you may have as you read this information.

**DOT quality grades—All passenger vehicle tires must conform to Federal Safety Requirements in addition to these grades. These quality grades are molded on the sidewall.**

**Treadwear—**The treadwear grade is a comparative rating based on the wear rate of the tire when tested under controlled conditions on a specified government test course. For example, a tire graded 150 would wear one and a half (1-1/2) times as well on the government course as a tire graded 100. The relative performance of tires depends upon the actual conditions of their use, however, and may depart significantly from the norm due to variations in driving habits, service practices and differences in road characteristics and climate.

**Traction AA, A, B, C—**The traction grades, from highest to lowest, are AA, A, B, and C, and they represent the tire’s ability to stop on wet pavement as measured under controlled conditions on specified government test surfaces of asphalt and concrete. A tire marked C may have poor traction performance.

Warning: The traction grade assigned to this tire is based on braking (straightahead) traction tests and does not include cornering (turning) traction.

**Temperature A, B, C—**The temperature grades are A (the highest), B, and C, representing the tire’s resistance to the generation of heat and its ability to dissipate heat when tested under controlled conditions on a specified indoor laboratory test wheel. Sustained high temperature can cause the material of the tire to degenerate and reduce tire life, and excessive temperature can lead to sudden tire failure. The grade C corresponds to a level of performance which all passenger car tires must meet under the Federal Motor Vehicle Safety Standard No. 109. Grades B and A represent higher levels of performance on the laboratory test wheel than the minimum required by law.

Warning: The temperature grades for this tire are established for a tire that is properly inflated and not overloaded. Excessive speed, underinflation, or excessive loading, either separately or in combination, can cause heat buildup and possible tire failure.

## New vehicle warranty

Your new vehicle is covered by the following Toyota limited warranties:

- New vehicle warranty
- Emission control systems warranty
- Others

For further information, please refer to the separate ”Owner’s Warranty Information Booklet” or ”Owner’s Manual Supplement”.

## Your responsibility for maintenance

It is owner’s responsibility to make sure that the specified maintenance is performed. Part 6 gives details of these maintenance requirements. Also included in Part 6 is general maintenance. For scheduled maintenance information, place refer to the separate ”Scheduled Maintenance Guide” or ”Owner’s Manual Supplement”.

## Accessories, spare parts and modification of your Toyota

A wide variety of non-genuine spare parts and accessories for Toyota vehicles are currently available in the market. You should know that Toyota does not warrant these products and is not responsible either for their performance, repair or replacement, or for any damage they may cause to, or adverse effect they may have on, your Toyota vehicle.

This vehicle should not be modified with non-genuine Toyota products. Modification with non-genuine Toyota products could affect its performance, safety or durability, and may even violate governmental regulations. In addition, damage or performance problems resulting from the modification may not be covered under warranty.

## Spark ignition system of your Toyota

The spark ignition system in your Toyota meets all requirements of the Canadian Interference-Causing Equipment Standard.

## Installation of a mobile two-way radio system

As the installation of a mobile two-way radio system in your vehicle could affect electronic systems such as multiport fuel injection system/sequential multiport fuel injection system, anti-lock brake system, SRS airbag system and seat belt pretensioner system, be sure to check with your Toyota dealer for precautionary measures or special instructions regarding installation.

## Scrapping of your Toyota

The SRS airbag and seat belt pretensioner devices in your Toyota contain explosive chemicals. If the vehicle is scrapped with the airbags and pretensioners left as they are, it may cause an accident such as a fire. Be sure to have the systems of the SRS airbag and seat belt pretensioner removed and disposed of by the qualified service shop or by your Toyota dealer before you dispose of your vehicle.

# Important information about this manual

## Safety and vehicle damage warnings

In this manual, you will see CAUTION and NOTICE warnings. These are used in the following ways:

**⚠ CAUTION**

**This is a warning against something which may cause injury to people if the warning is ignored. You are informed what you must or must not do in order to avoid or reduce the risk to yourself and other people.**

***NOTICE***

***This is a warning against something which may cause damage to the vehicle or its equipment if the warning is ignored. You are informed what you must or must not do in order to avoid or reduce the risk of damage to your vehicle and its equipment.***

## Safety symbol

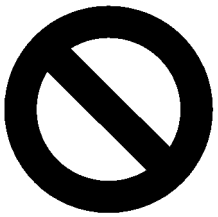

00060

In this manual, you will also see a circle with a slash through it. This means ”Do not”, ”Do not do this”, or ”Do not let this happen”.