OPEL VIVARO

Owner's Manual

Contents

Introduction 2
In brief 6
Keys, doors and windows 21
Seats, restraints 44
Storage 68
Instruments and controls 76
Lighting 98
Climate control 105
Driving and operating 116
Vehicle care 146
Service and maintenance 183
Technical data 187
Customer information 202
Index 206

Introduction

Fuel	Designation			
Engine oil	Grade			
	Viscosity			
Tyre pressure		Tyre size	Front	Rear
	Summer tyres			
	Winter tyres			
Weights				
	Gross vehicle weight rating			
	- Kerb weight, basic model			
	= Loading			

Vehicle specific data

Please enter your vehicle's data on the previous page to keep it easily accessible. This information is available in the sections "Service and maintenance" and "Technical data" as well as on the identification plate.

Introduction

Your vehicle is a designed combination of advanced technology, safety, environmental friendliness and economy.

This Owner's Manual provides you with all the necessary information to enable you to drive your vehicle safely and efficiently.

Make sure your passengers are aware of the possible risk of accident and injury which may result from improper use of the vehicle.

You must always comply with the specific laws and regulations of the country that you are in. These laws may differ from the information in this Owner's Manual.

Disregarding the description given in this manual may affect your warranty.

When this Owner's Manual refers to a workshop visit, we recommend your Opel Service Partner.

All Opel Service Partners provide first-class service at reasonable prices. Experienced mechanics trained by Opel work according to specific Opel instructions.

The customer literature pack should always be kept ready to hand in the vehicle.

Using this manual

- This manual describes all options and features available for this model. **Certain descriptions, including those for display and menu functions, may not apply to your vehicle due to model variant, country specifications, special equipment or accessories.**
- The "In brief" section will give you an initial overview.
- The table of contents at the beginning of this manual and within each section shows where the information is located.
- The index will enable you to search for specific information.
- This Owner's Manual depicts left-hand drive vehicles. Operation is similar for right-hand drive vehicles.
- The Owner's Manual uses the factory engine designations. The corresponding sales designations can be found in the section "Technical data".
- Directional data, e.g. left or right, or front or back, always relate to the direction of travel.
- The vehicle display screens may not support your specific language.
- Display messages and interior labelling are written in **bold** letters.

Danger, Warnings and Cautions

⚠Danger

Text marked ⚠**Danger** provides information on risk of fatal injury. Disregarding this information may endanger life.

⚠Warning

Text marked ⚠**Warning** provides information on risk of accident or injury. Disregarding this information may lead to injury.

Caution

Text marked **Caution** provides information on possible damage to the vehicle. Disregarding this information may lead to vehicle damage.

Symbols

Page references are indicated with ⇨. ⇨ means "see page".

Page references and index entries refer to the indented headings given in the section table of content.

We wish you many hours of pleasurable driving.

Adam Opel AG

In brief

Initial drive information

Vehicle unlocking

Unlocking with remote control

Press 🔓 to unlock the driver's door. Press again to unlock entire vehicle.

Open the doors by pulling the handles.

Press 🚚; only the load compartment is unlocked.

Radio remote control ⇨ 22, Central locking system ⇨ 25, Load compartment ⇨ 33, Unlocking with manual key ⇨ 25.

Unlocking with electronic key

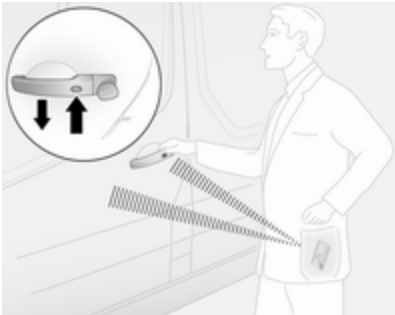

Press the button on any exterior door handle when the electronic key is within range of the detection zone (approx. one metre of the front doors or load compartment) and pull the handle to open.

- or -

Press electronic key button 🔓 to unlock all doors and the load compartment.

Electronic key system ⇨ 23.

Seat adjustment

Longitudinal adjustment

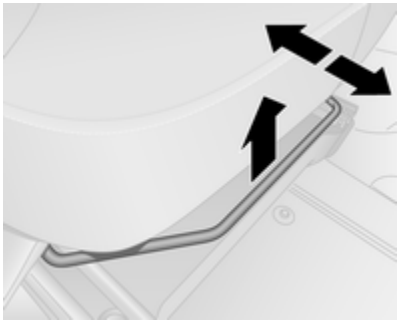

Pull handle, slide seat, release handle.

Try to move the seat back and forth to ensure that the seat is locked in place.

Seat position ⇨ 45, Seat adjustment ⇨ 46.

Backrests inclination

Pull lever, adjust inclination and release lever. Allow the backrest to engage. Do not lean on backrest when adjusting.

Seat position ⇨ 45, Seat adjustment ⇨ 46.

Seat height

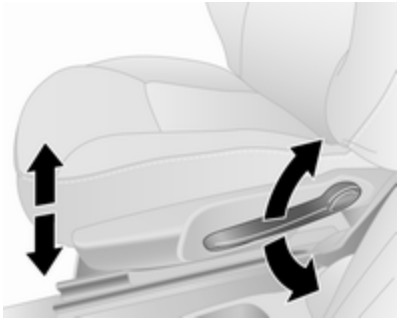

Lever pumping motion:

up : seat higher
down : seat lower

Seat position ⇨ 45, Seat adjustment ⇨ 46.

Head restraint adjustment

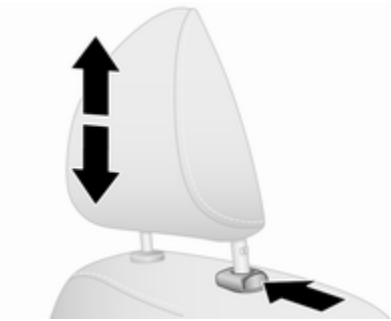

Press release button, adjust height, engage.

Head restraints ⇨ 44.

Seat belt

Pull out the seat belt and fasten in belt buckle. The seat belt must not be twisted and must fit close against the body. The backrest must not be tilted back too far (maximum approx. 25°).

To unfasten belt, press red button on belt buckle.

Seat position ⇨ 45, Seat belts ⇨ 51, Airbag system ⇨ 55.

Mirror adjustment

Interior mirror

To reduce dazzle, adjust the lever on the underside of the mirror housing.

Interior mirror, Wide view mirror ⇨ 40, Automatic anti-dazzle interior mirror ⇨ 41.

Exterior mirrors

Manual adjustment

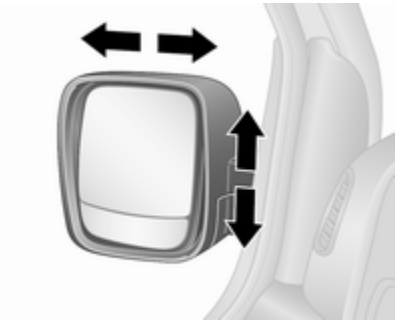

Swivel mirror in required direction.

The lower mirrors are not adjustable.

Exterior mirrors ⇨ 39.

Electric adjustment

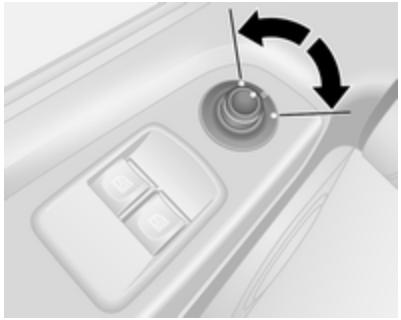

Select the relevant exterior mirror and adjust it.

Convex exterior mirrors ⇨ 39, Electric adjustment ⇨ 39, Folding exterior mirrors ⇨ 39, Heated exterior mirrors ⇨ 40.

Steering wheel adjustment

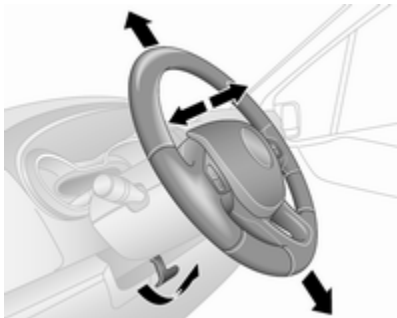

Unlock the lever, adjust the steering wheel, then engage the lever and ensure it is fully locked.

Do not adjust the steering wheel unless vehicle is stationary and the steering wheel lock has been released.

Airbag system ⇨ 55, Ignition positions ⇨ 118.

Instrument panel overview

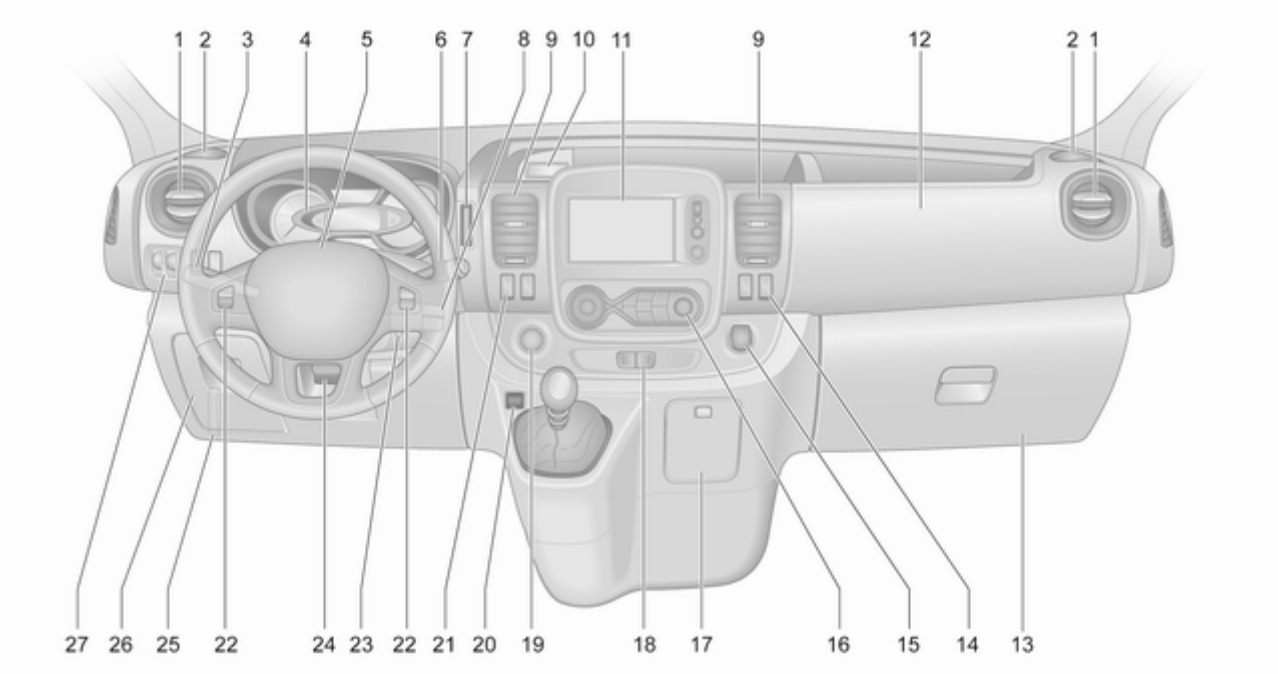

1 Side air vents 114
2 Ashtray 81
Cupholder 69
3 Light switch 98
Rear fog light 101
Front fog lights 101
Exit lighting 104
Turn and lane-change signals 101
Sidelights 98
Headlight flash, low beam and high beam 99
4 Instruments 81
Driver Information Centre (DIC) 92
5 Horn 77
Driver airbag 58
6 Windscreen wiper, windscreen washer system .. 78
Rear window wiper, rear window washer system 79
Trip computer 95
7 Card reader for electronic key system 23
8 Steering column controls 77
9 Centre air vents 114
10 Power outlet 80
Cigarette lighter 81
Coin tray, USB slot 68
11 Driver Information Centre (DIC) 92
Trip computer 95
12 Front passenger airbag 58
13 Glovebox 68
14 Heated exterior mirrors 40
Heated rear window 43
Idle speed control 120
15 Power outlet 80
Cigarette lighter 81
16 Climate control system 105
Electronic climate control system 107
17 Ashtray 81
Cupholder 69
18 Hazard warning flashers 100
Central locking system 25
19 Power button for electronic key system 118
20 Eco button for fuel economy mode 116
21 Stop-start system 121
Cruise control and speed limiter 135
22 Remote control on steering wheel 77
Cruise control 135
23 Ignition switch with steering wheel lock 118
24 Steering wheel adjustment ... 77
25 Bonnet release lever 148
26 Fuse box 162
27 Ultrasonic parking assist 138
Electronic Stability Program (ESP®Plus) 133
Traction Control system (TC) 132

Headlight range adjustment 99

Instrument panel illumination control 102

Auxiliary heater 110

Speed limiter 138

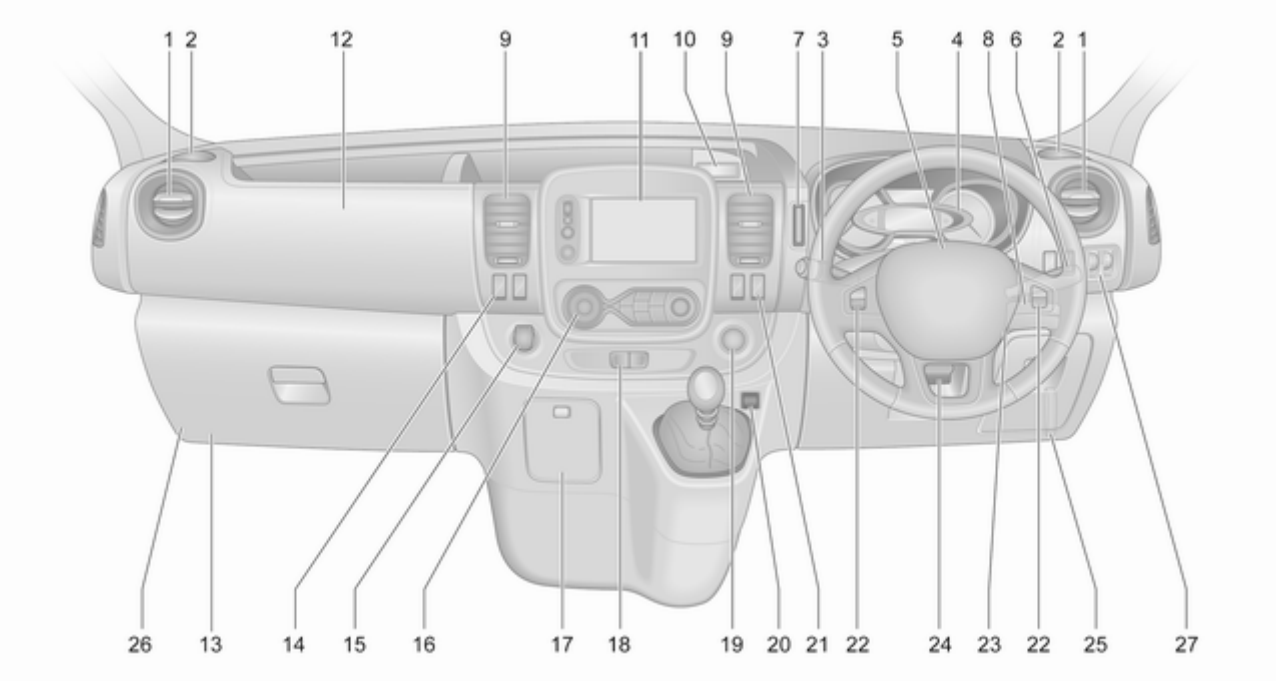
1
2
12
9
11
10
9
7
3
5
4
8
6
2
1
26
13
14
15
16
17
18
19
20
21
22
24
23
22
25
27

Exterior lighting

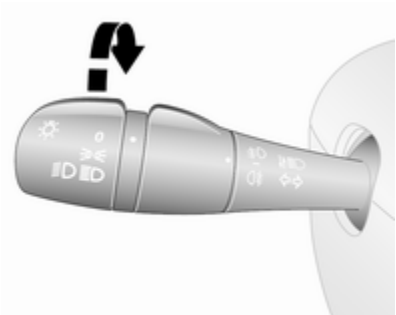

Turn outer switch:

0 : off
: sidelights
: headlights

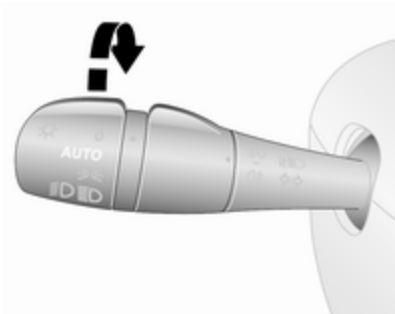

Vehicles with automatic light control:

AUTO : automatic light control: exterior lighting is switched on and off automatically depending on external lighting conditions.

Lighting ⇨ 98, Automatic light control ⇨ 99, Headlight warning device ⇨ 94, Adaptive forward lighting ⇨ 100.

Front and rear fog lights

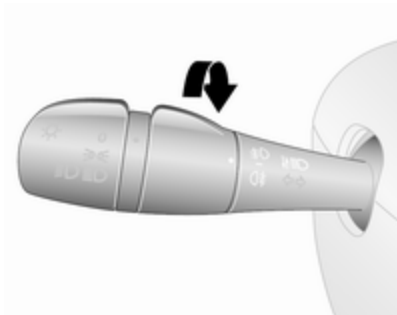

Turn inner switch

: front fog lights
: rear fog light

Front fog lights ⇨ 101, Rear fog light ⇨ 101.

Headlight flash, high beam and low beam

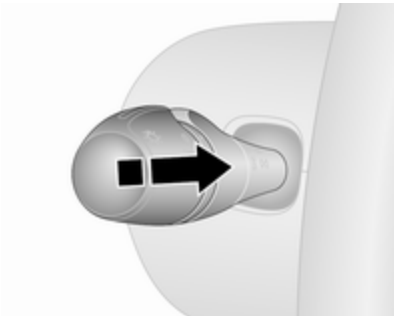

headlight flash : pull lever
high beam : push lever
low beam : push or pull lever

Automatic light control ⇨ 99, High beam ⇨ 99, Headlight flash ⇨ 99.

Turn and lane-change signals

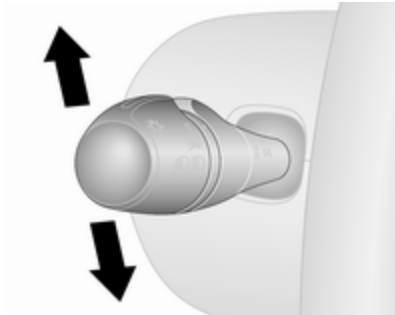

lever up : right turn signal
lever down : left turn signal

Turn and lane-change signals ⇨ 101.

Hazard warning flashers

Operated with the ⚠ button.

Hazard warning flashers ⇨ 100.

Horn

Press .

Washer and wiper systems

Windscreen wiper

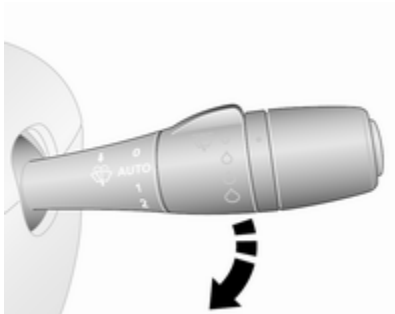

0	:	off
AUTO or	:	interval wiping or automatic wiping with rain sensor
1	:	slow
2	:	fast

Windscreen wiper ⇨ 78, Wiper blade replacement ⇨ 155.

Windscreen washer

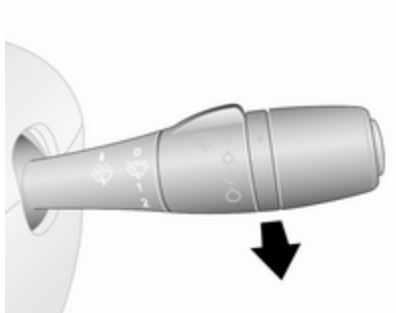

Pull lever.

Windscreen washer ⇨ 78, Washer fluid ⇨ 152.

Rear window wiper and washer system

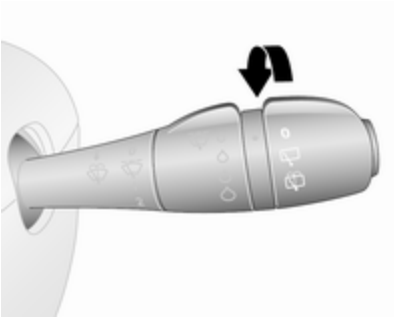

Turn lever:

0 : off
: wiper
: washer

Rear window wiper/washer ⇨ 79, Washer fluid ⇨ 152.

Climate control

Heated rear window

Heating is operated by pressing the button.

Heated rear window ⇨ 43.

Heated exterior mirrors

Pressing also activates the heated exterior mirrors.

Heated exterior mirrors ⇨ 40.

Demisting and defrosting the windows

Climate control system

- Air distribution to .
- Set temperature control to warmest level.
- Set fan speed to highest level.
- Cooling **A/C** on.
- Heated rear window on.

Climate control system ⇨ 105.

Electronic climate control system

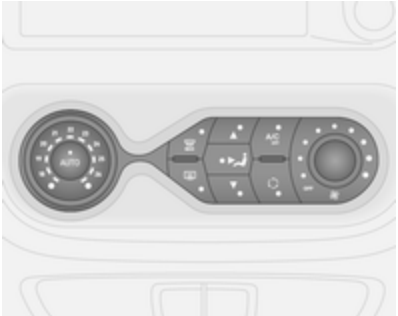

- Press MAX. LED illuminates in the button when activated.
- Temperature, air distribution and cooling are regulated automatically and the fan runs at high speed.
- Switch on heated rear window ⇨ 43.

Electronic climate control system ⇨ 107.

Transmission

Manual transmission

Reverse: with the vehicle stationary, wait 3 seconds after depressing clutch pedal and then pull up the collar on the selector lever and engage the gear.

If the gear does not engage, set the lever to neutral, release the clutch pedal and depress again; then repeat gear selection.

Manual transmission ⇨ 130.

Starting off

Check before starting off

- Tyre pressure and condition ⇨ 166, ⇨ 201.
- Engine oil level and fluid levels ⇨ 149.
- All windows, mirrors, exterior lighting and number plates are free from dirt, snow and ice and are operational.
- Proper position of mirrors, seats and seat belts ⇨ 39, ⇨ 45, ⇨ 52.
- Brake function at low speed, particularly if the brakes are wet.

Starting the engine with key

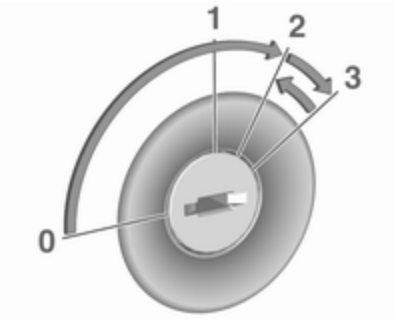

- Turn key to position **1**.
- Move the steering wheel slightly to release the steering wheel lock.
- Operate clutch and brake pedal.
- Do not operate accelerator pedal.
- Diesel engines: turn the key to position **2** for preheating and wait until control indicator extinguishes in the instrument cluster.
- Turn key to position **3** and release.

Starting the engine ⇨ 120.

Starting the engine with the power button

Electronic key must be inside the vehicle, either in the card reader or the front passenger compartment.

- Move the steering wheel slightly to release the steering wheel lock.
- Operate clutch and brake pedal.
- Do not operate accelerator pedal.
- Press **START/STOP** and release.
- Engine starts after a short delay.

Power button ⇨ 118.

Stop-start system

If the vehicle is at low speed or in standstill and certain conditions are fulfilled, activate an Autostop as follows:

- Depress the clutch pedal.
- Move the selector lever to neutral.
- Release the clutch pedal.

An Autostop is indicated when Ⓐ illuminates in the instrument cluster ⇨ 91.

To restart the engine, depress the clutch pedal again.

Stop-start system ⇨ 121.

Parking

⚠ Warning

- Do not park the vehicle on an easily ignitable surface. The high temperature of the exhaust system could ignite the surface.
- Always apply parking brake without pressing release button. Apply as firmly as possible on a downhill slope or uphill slope. Depress brake pedal at the same time to reduce operating force.
- Switch off the engine.
- If the vehicle is on a level surface or uphill slope, engage first gear. On an uphill slope, turn the front wheels away from the kerb.

  If the vehicle is on a downhill slope, engage reverse gear. Turn the front wheels towards the kerb.
- Close the windows.
- Remove the ignition key from the ignition switch. Turn the steering wheel until the steering wheel lock is felt to engage.

- Lock the vehicle by pressing 🔒 on the remote control ⇨ 25.

  Activate the anti-theft alarm system ⇨ 36.
- The engine cooling fans may run after the engine has been switched off ⇨ 148.

Caution

After running at high engine speeds or with high engine loads, operate the engine briefly at a low load or run in neutral for approx. 30 seconds before switching off, in order to protect the turbocharger.

Keys, locks ⇨ 21, Laying the vehicle up for a long period of time ⇨ 147.

Keys, doors and windows

Keys, locks **21**
Keys 21
Car Pass 21
Radio remote control 22
Electronic key system 23
Door locks 25
Central locking system 25
Automatic locking 30
Child locks 30
Doors **31**
Sliding door 31
Rear doors 31
Load compartment 33
Vehicle security **35**
Anti-theft locking system 35
Anti-theft alarm system 36
Immobiliser 38
Exterior mirrors **39**
Convex shape 39
Manual adjustment 39
Electric adjustment 39
Folding mirrors 39
Heated mirrors 40
Interior mirrors **40**
Manual anti-dazzle 40
Automatic anti-dazzle 41
Windows **41**
Windscreen 41
Power windows 41
Rear windows 42
Heated rear window 43
Sun visors 43

Keys, locks

Keys

Replacement keys

The key number is specified on the key or on a detachable tag.

The key number must be quoted when ordering replacement keys as it is a component of the immobiliser system.

Locks ⇨ 179, Radio remote control ⇨ 22, Electronic key system ⇨ 23, Central locking ⇨ 25, Starting the engine ⇨ 120.

Car Pass

The Car Pass contains security related vehicle data and should therefore be kept in a safe place.

When the vehicle is taken to a workshop, this vehicle data is needed in order to perform certain operations.

Radio remote control

Used to operate:

- central locking system ⇨ 25
- anti-theft locking system ⇨ 35
- anti-theft alarm system ⇨ 36
- load compartment ⇨ 33

The remote control has a range of approx. 5 metres. It can be restricted by external influences. The hazard warning flashers confirm operation.

Handle with care, protect it from moisture and high temperatures and avoid unnecessary operation.

Depending on model, the vehicle may use a 2 button or 3 button remote control or an electronic key which includes the functionality of the radio remote control.

Electronic key system ⇨ 23.

Fault

If the central locking system cannot be operated with the remote control, it may be due to the following:

- range exceeded
- battery voltage too low
- frequent, repeated operation of the remote control while not in range, which will require reprogramming by a workshop
- overload of the central locking system by operating at frequent intervals, the power supply is interrupted for a short time
- interference from higher-power radio waves from other sources

Manual key operation ⇨ 25.

Remote control battery replacement

Replace the battery as soon as the range reduces.

Batteries do not belong in household waste. They must be disposed of at an appropriate recycling collection point.

2-button and 3-button remote control

Remove screw and open battery compartment by inserting a coin into the slot and twisting.

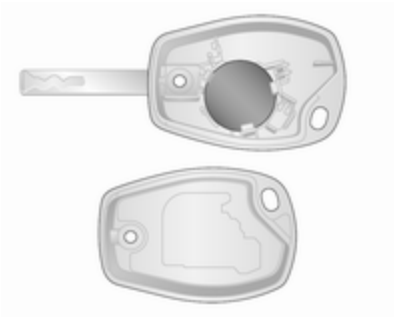

Replace the battery (battery type CR 2016), paying attention to the installation position.

Reattach both halves of the cover, ensuring they engage correctly.

Replace screw and tighten.

Electronic key

The need for battery replacement is indicated by a message in the Driver Information Centre (DIC) ⇨ 93.

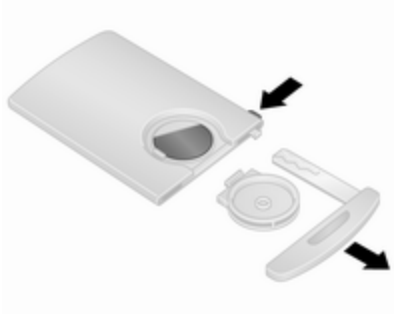

Press and hold the release button on the side of the electronic key and pull out the emergency manual key from the top. Unclip the battery cover located on the rear of the electronic key, then press one side of the battery to release and remove the battery.

Replace the battery (battery type CR 2016), paying attention to the installation position.

Reattach battery cover and reinsert the emergency manual key.

Electronic key synchronisation

Press any button on the electronic key four times within range of the detection zone (approx. one metre) of the front doors or load compartment. The electronic key will be synchronised when the ignition is switched on.

Electronic key system

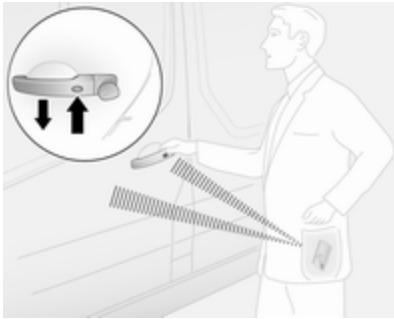

Enables a handsfree operation of the following functions:

- central locking system ⇨ 25
- load compartment ⇨ 33
- ignition switching on and starting the engine ⇨ 118

The electronic key simply needs to be on the driver's person.

Note
Always take the electronic key with you when exiting the vehicle.

The electronic key being left in the card reader is indicated by a warning chime ⇨ 94 and a message in the Driver Information Centre (DIC) ⇨ 93 when the driver's door is opened.

Additionally, the electronic key includes the functionality of the radio remote control ⇨ 22 and an entry lighting function ⇨ 103.

Handle with care, protect from moisture and high temperatures and avoid unnecessary operation.

Note
Do not put the electronic key in the load compartment during driving, as this is outside of the detection zone (indicated by a warning chime at low speed ⇨ 94 and a message in the Driver Information Centre (DIC) ⇨ 93).

Handsfree operation is automatically disabled when the electronic key buttons have been operated or the central locking switch ⇨ 25 is pressed. To re-enable handsfree operation, restart the engine.

Power button ⇨ 118.

Replacing battery in electronic key

Replace the battery as soon as the system no longer operates properly or the range is reduced. The need for battery replacement is indicated by a message in the DIC ⇨ 93.

Battery replacement, see Radio remote control ⇨ 22.

Fault

If the central locking system cannot be operated or the engine cannot be started, the cause may be one of the following:

- fault in electronic key
- electronic key out of reception range
- battery voltage too low
- overload of the central locking system by operating at frequent intervals, the power supply is interrupted for a short time
- interference from higher-power radio waves from other sources

Emergency manual key

Press and hold the release button on the side of the electronic key and pull out the emergency manual key from the top.

Manually lock or unlock the doors by turning the key in the lock.

After use, reinsert the emergency manual key in the housing of the electronic key.

Door locks

Anti-theft security lock

To prevent the front door from being opened from the outside, open the door and engage the anti-theft security lock.

Using a suitable tool, turn the lock switch on the door to the locked position. The door cannot be opened from outside.

The anti-theft security lock remains engaged even after unlocking the vehicle with the remote control. The door can only be opened from inside or by using the manual key.

To disengage, turn the switch to the unlocked position.

Rear door manual lock

Turn the lock switch clockwise to lock the left-hand rear door. To disengage lock, turn the switch anticlockwise.

Rear doors ⇨ 31.

Central locking system

Unlocks and locks the front doors, sliding side doors and load compartment.

With the 3-button remote control, the front doors and load compartment/ sliding side doors (where fitted) can be unlocked and locked separately.

For safety reasons, the vehicle cannot be locked if the key is in the ignition switch.

Note
If no door is opened within approx. 2 minutes after the vehicle has been unlocked, the vehicle is re-locked automatically.

Close doors and load compartment. If the doors are not closed properly, the central locking system will not work.

Refer to "Manual key operation" below for further information.

Remote control operation

Operation of central locking system with the remote control is confirmed by the hazard warning flashers.

Unlocking with 2-button remote control

Depending on configuration:

- Press and hold 🔓 to unlock all doors and the load compartment.

  - or -

- Press 🔓 once to unlock the driver's door, and press 🔓 twice to unlock all doors and the load compartment.

Unlocking with 3-button remote control

Depending on configuration:

- Press and hold 🔓 to unlock all doors and the load compartment.

  - or -

- Press 🔓 once to unlock the driver's door, and press 🔓 twice to unlock all doors and the load compartment.

  - or -

- Press 🔓 once to unlock all doors and the load compartment.

Locking with 2-button remote control

Press 🔒: All doors and the load compartment are locked.

Locking with 3-button remote control

Press 🔒: All doors and the load compartment are locked.

Note
Where fitted, alarm monitoring of the passenger compartment ⇨ 36 is switched off by pressing and holding 🔒 (which is confirmed by an audible signal).

If this was done unintentionally, unlock the doors again and press 🔒 briefly to lock the vehicle.

Load compartment locking and unlocking with 2-button remote control

Depending on configuration, press 🔓 once or twice to unlock the load compartment (and sliding side doors).

Press 🔒 to lock the load compartment (and, depending on version, the sliding side doors).

Load compartment locking and unlocking with 3-button remote control

Press 🚗 to lock or unlock load compartment (and, depending on version, the sliding side doors).

Electronic key system operation

For handsfree operation, the electronic key must be outside the vehicle, within a range of approx. one metre of the front doors or load compartment.

Note
There is no button for handsfree operation in the exterior door handle of the sliding side door.

There must be no electronic key left inside the vehicle and no additional electronic key in the detection zones, or handsfree operation of the central locking system will not work.

Operation of central locking system with the electronic key is confirmed by the hazard warning flashers.

⚠ Danger

Never leave an electronic key inside the vehicle when children or animals are left in the vehicle, to avoid unintended operation of windows, doors or engine. Risk of fatal injury.

Unlocking with electronic key - handsfree operation

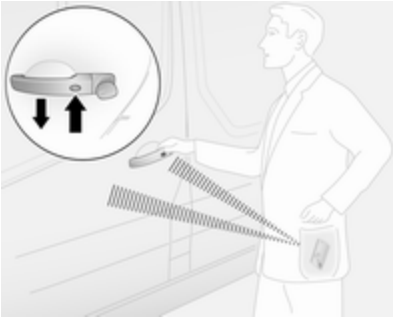

Press the button on any exterior door handle and pull the handle to open.

The vehicle only unlocks when at least 3 seconds have passed since locking using handsfree operation.

Handsfree operation is automatically disabled when the electronic key buttons have been operated. To re-enable handsfree operation, restart the engine.

Unlocking with electronic key buttons

Press 🔓 to unlock all doors and the load compartment.

Locking with electronic key - handsfree operation

Press the button on any exterior door handle. All doors and the load compartment are locked.

The vehicle only locks when at least 3 seconds have passed since unlocking using handsfree operation.

Handsfree operation is automatically disabled when the electronic key buttons have been operated. To re-enable handsfree operation, restart the engine.

Locking with electronic key buttons

Press 🔒 to lock all doors and the load compartment.

Load compartment locking and unlocking with electronic key - handsfree operation

Press the button on the exterior door handle to lock or unlock the rear doors/tailgate (and sliding side doors)

when the electronic key is within range of the detection zone (approx. one metre).

The rear doors/tailgate (and sliding side doors) only lock/unlock when at least 3 seconds have passed since the button was last pressed.

Handsfree operation is automatically disabled when the electronic key buttons have been operated. To re-enable handsfree operation, restart the engine.

Load compartment locking and unlocking with electronic key buttons

Press to lock/unlock the rear doors/tailgate (and sliding side doors).

Electronic key system ⇨ 23.

Manual key operation

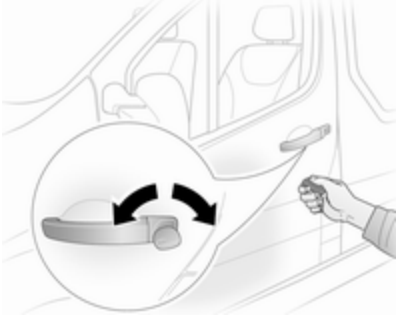

Manually lock or unlock the doors by turning the key in the lock.

Rear doors

In the event the rear doors are locked manually after the vehicle has been unlocked with remote control button , lock the entire vehicle again by pressing to reset central locking system. Otherwise pressing may not unlock the rest of the vehicle.

After manually unlocking the rear doors when the rest of the vehicle is locked, it may be necessary to press twice to lock the entire vehicle.

Central locking switch

Locks or unlocks the doors and load compartment from the passenger compartment.

Press to lock the vehicle. Activation is indicated by the LED in the button. When closing any open door, the door is locked automatically.

Press again to unlock the vehicle.

If the vehicle is driven with an open load compartment, the front doors (and sliding side doors) can still be locked. With the ignition switched on, press and hold 🔒 for approx. 5 seconds. When closing the rear doors/tailgate, they are locked automatically.

Automatic locking ⇨ 30.

Handsfree operation is automatically disabled when 🔒 is pressed. To re-enable handsfree operation, restart the engine.

Electronic key system ⇨ 23.

Slam door locks

Certain models feature load compartment locks which are isolated for added security.

With slam door locks, while the doors can be locked and unlocked using the remote control or electronic key, the load compartment must be manually opened by turning the key in the lock.

Rear doors ⇨ 31.

Automatic locking

Automatic locking after driving off

This security feature can be configured to automatically lock the doors and load compartment as soon as the vehicle is driven.

Activation

With the ignition switched on, press and hold 🔒 on the central locking switch for approx. 5 seconds. An audible signal confirms activation.

Deactivation

With the ignition switched on, press and hold 🔒 on the central locking switch for approx. 5 seconds. An audible signal confirms deactivation.

Central locking switch ⇨ 25.

Child locks

The child safety lock for the sliding side door is located on its rearward facing edge.

To prevent the sliding side door from being opened from the inside, open the door and engage the child lock.

⚠ Warning

Use the child locks whenever children are occupying the rear seats, to prevent unintentional opening from the inside.

Using a suitable tool, turn the child lock switch in the sliding side door to the locked position; the door cannot be opened from the inside.

The child lock remains engaged even after unlocking the vehicle with the remote control. The door can only be opened from outside.

To disengage, turn the child lock switch to the unlocked position.

Doors

Sliding door

Open and close the sliding side door only when the vehicle is at a standstill with the parking brake applied.

Pull the interior handle towards the rear to unlock and open.

The door can be locked from inside the vehicle with the interior lock switch.

Central locking system ⇨ 25.

⚠ Warning

Take care when operating the sliding side door. Risk of injury.

Ensure that nothing becomes trapped during operation and no-one is standing within the moving area.

If the vehicle is parked on a slope, open sliding doors may move accidentally on account of their weight.

Close the sliding doors before driving off.

Rear doors

The rear doors can only be opened if the vehicle is unlocked. Central locking system, manual key operation ⇨ 25.

To open the left-hand rear door, pull the outside handle.

The door is opened from inside the vehicle by pulling the interior handle.

The right-hand rear door is released using the lever.

⚠ Warning

The rear lights may be obscured if the rear doors are open and the vehicle is parked on the roadside.

Make other road users aware of the vehicle, by using a warning triangle or other equipment specified in the road traffic regulations.

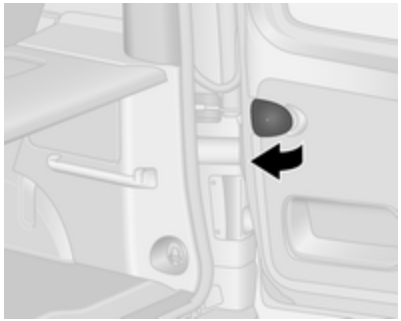

The doors are retained in the 90º position by locking stays. To open the doors to 180º or further, pull the door release handles and swing open to the desired position.

⚠ Warning

Ensure extended opening doors are secured when fully opened.

Opened doors may slam closed due to the force of the wind!

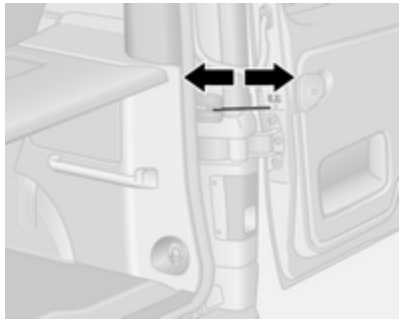

When closing the doors, secure each locking stay to the catch on the door frame.

Always close the right-hand door before the left-hand door.

Door locks ⇨ 25, Central locking system ⇨ 25.

Driving with an open load compartment

To drive with the right-hand rear door open, e.g. if long objects need to be transported, open the left-hand followed by the right-hand rear door, then close the left-hand rear door.

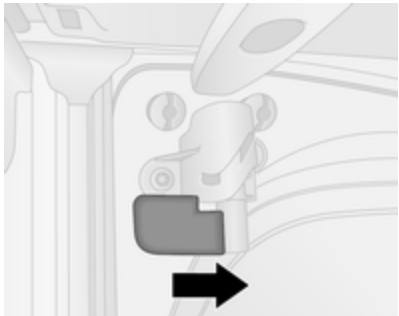

Engage the interior lock in its housing by turning the handle clockwise to the locked position. The door is bolted and cannot be opened from outside.

Disengage the lock by turning the handle anticlockwise, to enable the door to be opened.

Caution

Always make sure that the load in the vehicle is securely stowed when driving with an open load compartment.

For further information, refer to "Loading information" ⇨ 75.

Always comply with local or national regulations.

Load compartment

Tailgate

Opening

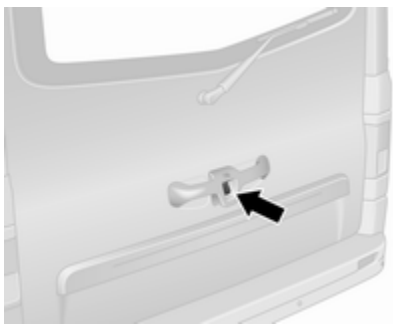

After unlocking, press tailgate button and lift tailgate to the fully open position.

The tailgate can be also opened from inside the vehicle by operating the tailgate interior release.

Note
In very cold climates, the opening assistance provided by the tailgate hydraulic struts may be reduced.

Central locking system ⇨ 25.

Closing

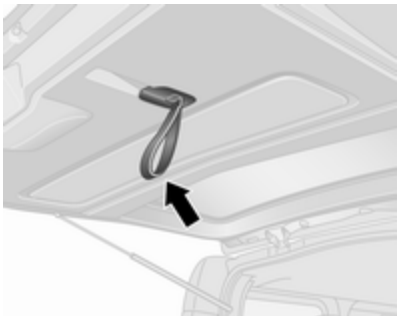

Close tailgate using the interior strap. Ensure tailgate is fully closed.

Central locking system ⇨ 25.

Emergency tailgate opening from inside the vehicle

Depending on model, prise off the cover on the inside of the tailgate.

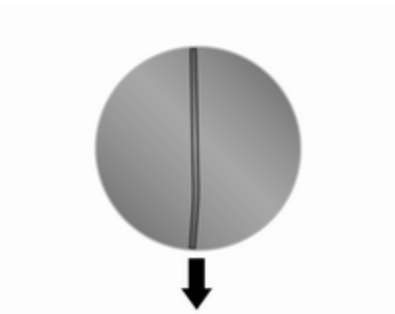

Then grasp the metal string and pull it downwards to unlock. Push the tailgate to open.

General hints for operating tailgate

⚠ Danger

Do not drive with the tailgate open or ajar, e.g. when transporting bulky objects, since toxic exhaust gases, which can not be seen or smelled, could enter the vehicle. This can cause unconsciousness and even death.

Caution

Before opening the tailgate, check overhead obstructions, e.g. a garage door, to avoid damage to the tailgate.

Ensure there is adequate clearance both above (at least 2.15 metres) and behind when opening tailgate.

Note
The installation of certain heavy accessories onto the tailgate may affect its ability to remain open.

Vehicle security

Anti-theft locking system

⚠ Warning

Do not use the system if there are people in the vehicle! The doors cannot be unlocked from the inside.

The system deadlocks all doors and the load compartment.

All doors and the load compartment must be closed or the system cannot be activated.

Note
The anti-theft locking system cannot be activated when the hazard warning lights or sidelights are switched on.

Activation and deactivation are not possible with the central locking switch.

Central locking system ⇨ 25.

2-button and 3-button remote control operation

Operation is confirmed by the hazard warning flashers flashing five times.

Activation

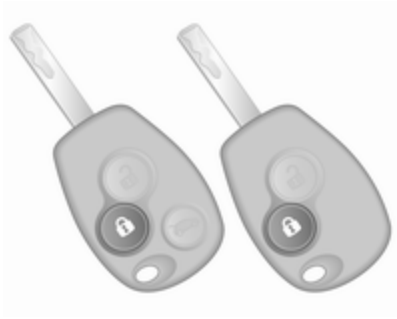

Press 🔒 twice.

- or -

Turn manual key in driver's door lock towards rear of vehicle twice.

Deactivation

Unlock the doors by pressing 🔓 on the remote control or by turning the manual key in driver's door lock towards front of vehicle.

Electronic key system operation

Operation is confirmed by the hazard warning flashers.

Activation

For handsfree operation, the electronic key must be outside the vehicle, within a range of approx. one metre of the front doors or load compartment.

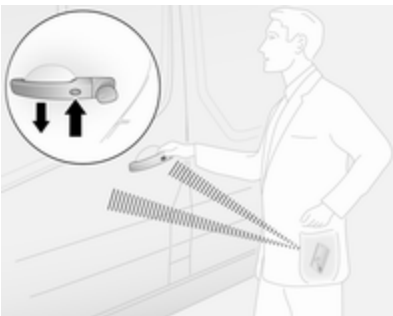

Press the button twice on any exterior door handle.

- or -

Press 🔒 twice.

Deactivation

Unlock the doors by pressing the button on any exterior door handle or press 🔓.

Handsfree operation is automatically disabled when the electronic key buttons have been operated (or the central locking switch 🔒 is pressed). To re-enable handsfree operation, restart the engine.

Central locking system ⇨ 25.

Electronic key system ⇨ 23.

Anti-theft alarm system

The anti-theft alarm system is operated in conjunction with the central locking system ⇨ 25.

It monitors:

- doors, tailgate, bonnet
- passenger compartment
- load compartment
- ignition
- interruption of alarm siren power supply

Activation

All doors and the bonnet must be closed.

Hazard warning lights flash to confirm activation. If the hazard warning lights do not flash upon activation, a door or the bonnet is not fully closed.

2-button and 3-button remote control

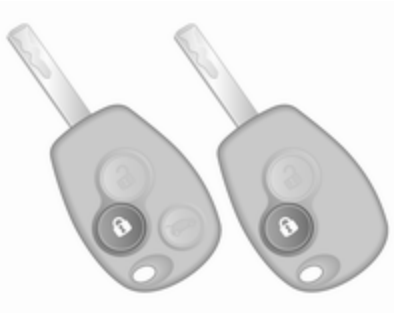

Press 🔒 to activate the anti-theft alarm system.

Electronic key

For handsfree operation, the electronic key must be outside the vehicle, within a range of approx. one metre of the front doors or load compartment.

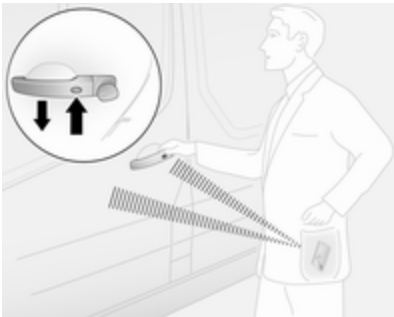

Press the button on any exterior door handle.

- or -

Press 🔒 to activate the anti-theft alarm system.

Electronic key system ⇨ 23.

Deactivation

Unlocking the vehicle (with 🔓 or the button on any exterior door handle) or switching on the ignition deactivates the anti-theft alarm system. Hazard warning lights flash to confirm deactivation.

The system is not deactivated when unlocking the driver's door with the key or with the central locking switch in the passenger compartment.

Note
If the alarm has been triggered, unlocking the vehicle with the key will not stop the alarm siren. To stop the siren, switch on the ignition. The hazard warning lights will not flash upon deactivation if the alarm has been triggered.

Activation without monitoring of passenger compartment

Disable monitoring of the passenger compartment, e.g. when animals are being left in the vehicle, or if the auxiliary heater has been set for a timed or remote controlled start ⇨ 110.

Press and hold on the remote control or electronic key; an audible signal will sound as confirmation.

The status will remain until the doors are unlocked.

Alarm

When triggered, the alarm sounds via a separate battery-backed power sounder, and the hazard warning lights flash simultaneously. The number and duration of alarm signals are stipulated by legislation.

If the vehicle battery is disconnected or its power supply is interrupted, the alarm siren will be triggered. First deactivate the anti-theft alarm system if the vehicle battery must be disconnected.

To silence the alarm siren (if triggered) and therefore deactivate the anti-theft alarm system, reconnect vehicle battery and unlock the vehicle or switch on the ignition.

Immobiliser

The immobiliser is part of the ignition switch and checks whether the vehicle is allowed to be started with the key being used.

The immobiliser is activated automatically after the key has been removed from the ignition switch and also if the key is left in the ignition switch when the engine is turned off.

If the engine cannot be started, switch off the ignition and remove key, wait approx. 2 seconds and then repeat the start attempt. If start attempt is unsuccessful, attempt to start the engine using the spare key and seek the assistance of a workshop.

Note
The immobiliser does not lock the doors. You should always lock the vehicle after leaving it and switch on the anti-theft alarm system ⇨ 25, ⇨ 36.

Exterior mirrors

Convex shape

The convex exterior mirror contains an aspherical area and reduces blind spots. The shape of the mirror makes objects appear smaller, which will affect the ability to estimate distances.

Manual adjustment

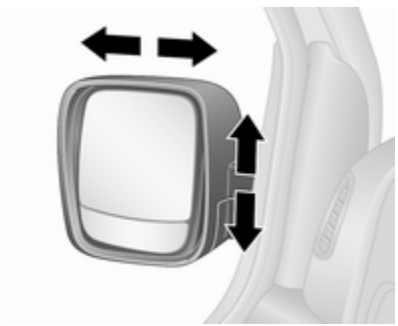

Adjust mirrors by swivelling in required direction.

The lower mirrors are not adjustable.

Electric adjustment

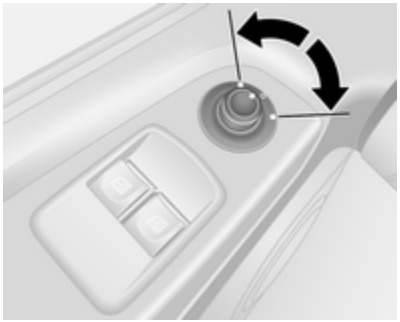

Select the relevant exterior mirror by switching the control to the left or right, then swivel the control to adjust the mirror.

No mirror is selected when the control is in the centre position.

The lower mirrors are not adjustable.

Folding mirrors

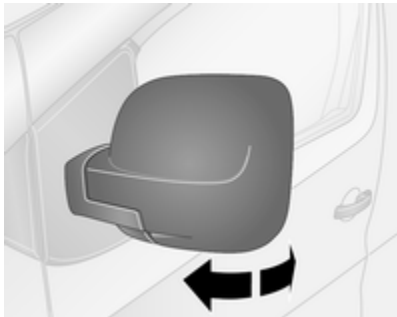

For pedestrian safety, the exterior mirrors will swing out of their normal mounting position if they are struck with sufficient force. Reposition the mirror by applying slight pressure to the mirror housing.

Parking position

The exterior mirrors can be folded in by pressing gently on the outer edge of the housing, e.g. when in a confined parking situation.

Depending on version, exterior mirrors can be automatically folded to the parking position upon locking the vehicle. For further information, refer to the Infotainment system manual.

Heated mirrors

Operated by pressing ⊞. Activation is indicated by the LED in the button.

Heating functions with the engine running. It is switched off automatically after a short time.

Climate control system ⇨ 105.

Interior mirrors

Manual anti-dazzle

To reduce dazzle, adjust the lever on the underside of the mirror housing.

Wide view mirror

Depending on vehicle, a large convex mirror is located in the front passenger sun visor which helps to increase visibility and reduce blind spots.

Automatic anti-dazzle

Dazzle from following vehicles at night is automatically reduced.

Windows

Windscreen

Heat-reflecting windscreen

The heat-reflecting windscreen has a coating which reflects solar radiation. Also data signals, e.g. from toll stations, might be reflected.

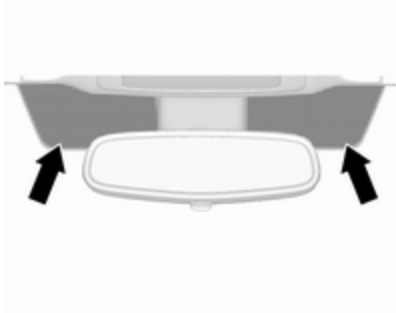

The marked areas on the windscreen are not covered with the coating. Devices for electronic data recording and fee payment must be attached in these areas. Otherwise data recording malfunctions may occur.

Windscreen stickers

Do not attach stickers such as toll road stickers or similar on the windscreen in the area of the interior mirror.

Power windows

⚠ Warning

Take care when operating the power windows. Risk of injury, particularly to children.

Keep a close watch on the windows when closing them. Ensure that nothing becomes trapped in them as they move.

Switch on ignition to operate the power windows.

Operate the switch for the respective window by pushing to open or pulling to close.

For incremental operation: Push or pull switch briefly.

For automatic opening or closing: Push or pull switch for longer. Window moves up or down automatically with safety function enabled. To stop movement, operate the switch once more in the same direction.

In the event of closing difficulties due to frost or the like, operate the switch several times to close the window in stages.

Safety function

If the window glass encounters resistance during automatic closing, it is immediately stopped and opened again.

Overload

If the windows are repeatedly operated within short intervals, the window operation is disabled for some time.

Rear windows

Sliding side windows

To open or close, raise the handle and slide window.

Sun blind

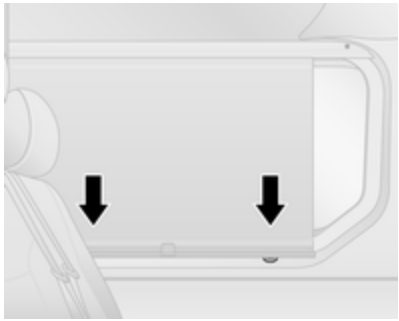

Depending on vehicle, a sunblind is integrated into the window cover.

To close, pull handle downwards and engage the locks at the bottom.

To open, disengage the locks by pulling sunblind towards you slightly and guide it upwards.

Heated rear window

Operated by pressing the button. Activation is indicated by the LED in the button.

Heating functions with the engine running and is switched off automatically after a short time.

Climate control system ⇨ 105.

Sun visors

The sun visors can be folded down or swivelled to the side to prevent dazzling.

Sun visors have vanity mirrors and a ticket holder on the rear.

The mirror covers should be closed when driving.

Wide view mirror ⇨ 40.

Seats, restraints

Head restraints **44**
Front seats **45**
Seat position 45
Seat adjustment 46
Seat folding 47
Armrest 48
Heating 48
Rear seats **48**
Seat belts **51**
Three-point seat belt 52
Airbag system **55**
Front airbag system 58
Side airbag system 58
Curtain airbag system 59
Airbag deactivation 59
Child restraints **61**
Child restraint systems 61
Child restraint installation locations 62
Isofix child restraint systems 67
Top-tether fastening eyes 67

Head restraints

Position

⚠ Warning

Only drive with the head restraint set to the proper position.

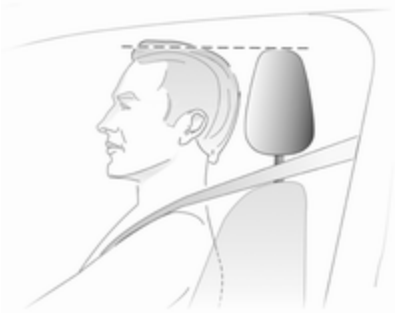

The upper edge of the head restraint should be at upper head level. If this is not possible for extremely tall people, set to highest position, and set to lowest position for small people.

Adjustment

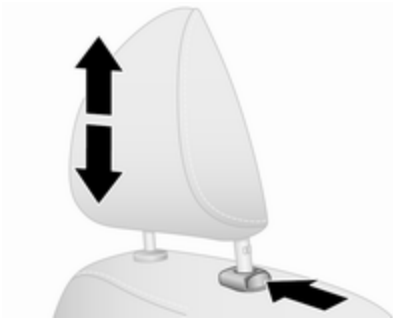

Press release button, adjust height and engage.

Note
Approved accessories may only be attached to the front passenger seat head restraint if the seat is not in use.

Removal

E.g. when using a child restraint system ⇨ 61.

First tilt the backrest forwards, then pull up head restraint to uppermost position. Press release button and pull the head restraint upwards to remove.

Stow head restraints securely in load compartment. Do not drive with head restraints removed if the seat is occupied.

Front seats

Seat position

⚠ Warning

Only drive with the seat correctly adjusted.

⚠ Danger

Do not sit nearer than 25 cm from the steering wheel, to permit safe airbag deployment.

⚠ Warning

Never adjust seats while driving as they could move uncontrollably.

⚠ Warning

Never store any loose objects under the seats.

Underseat storage, storage box ⇨ 70.

- Sit with buttocks as far back against the backrest as possible. Adjust the distance between the seat and the pedals so that legs are slightly angled when pressing the pedals. Slide the front passenger seat as far back as possible.
- Set seat height high enough to have a clear field of vision on all sides and of all display instruments. There should be at least one hand of clearance between head and the roof frame. Thighs should rest lightly on the seat without pressing into it.

- Sit with shoulders as far back against the backrest as possible. Set the backrest rake so that it is possible to reach the steering wheel with arms slightly bent. Maintain contact between shoulders and the backrest when turning the steering wheel. Do not angle the backrest too far back. We recommend a maximum rake of approx. 25°.
- Adjust the steering wheel ⇨ 77.
- Adjust the head restraint ⇨ 44.
- Adjust the height of the seat belt ⇨ 52.
- Adjust the lumbar support so that it supports the natural shape of the spine ⇨ 46.

Seat adjustment

Drive only with engaged seats and backrests.

Longitudinal adjustment

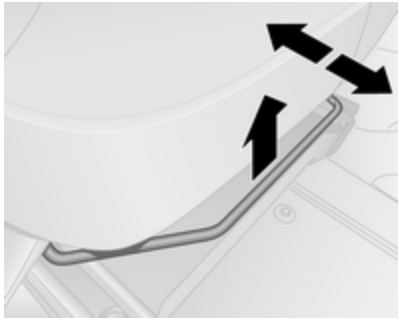

Pull handle, slide seat, then release handle.

Try to move the seat back and forth to ensure that the seat is locked in place.

Backrest inclination

Pull lever, adjust inclination and release lever. Allow the backrest to engage audibly.

Do not lean on backrest when adjusting.

Seat height

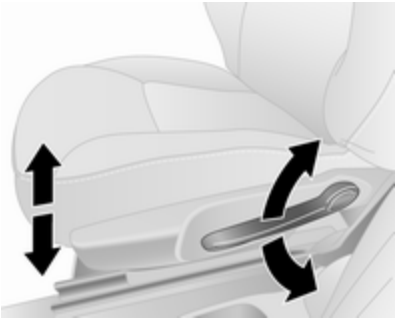

Lever pumping motion:

up : seat higher
down : seat lower

Lumbar support

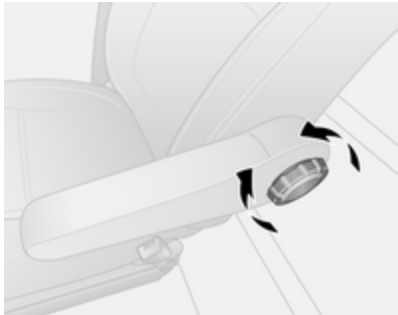

Adjust lumbar support using handwheel to suit personal requirements.

Rotate handwheel to increase and decrease support.

Seat folding

Folding front centre passenger seat

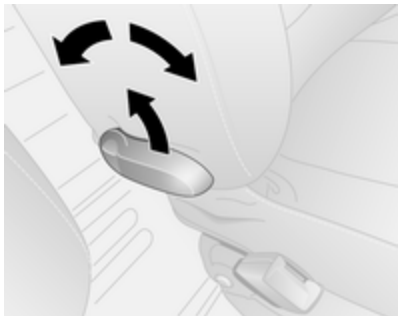

Pull release lever, fold backrest fully forwards then release the lever. Allow the backrest to engage audibly.

Note
When seat height is in its highest position, push head restraints down before folding backrest.

Ensure that nothing prevents the seat from folding, e.g. sun visor ⇨ 43, cup holder ⇨ 69.

To restore, pull release lever, raise backrest then release the lever. Allow the backrest to engage audibly.

⚠Warning

When the front passenger seat is in the folded position, the front passenger airbag system must be deactivated.

Airbag deactivation ⇨ 59.

Armrest

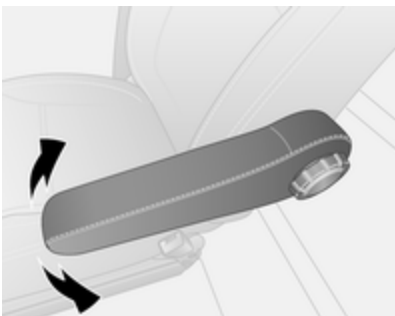

Raise or lower the armrest as required.

Heating

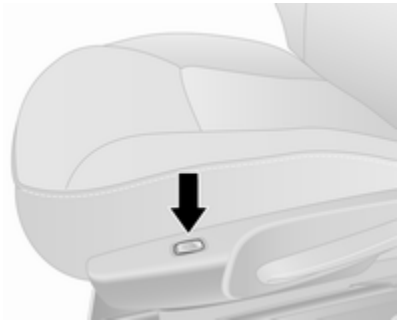

Press for the respective seat. LED in switch illuminates. Press other end of rocker switch to turn seat heating off.

Seat heating is thermostatically controlled and switches off automatically when seat temperature is sufficient.

Prolonged use of the highest setting for people with sensitive skin is not recommended.

Seat heating is operational when the engine is running.

Rear seats

⚠Warning

When rear seats or backrests are being adjusted or folded, keep hands and feet away from the moving area.

Never adjust seats while driving as they could move uncontrollably.

Drive only with engaged seats and backrests.

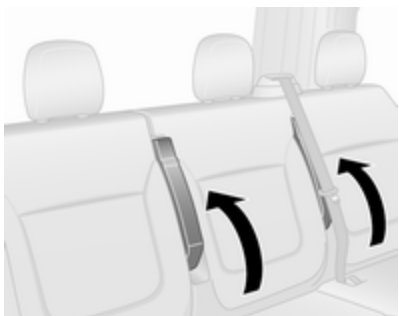

When folding or removing the rear seat, ensure the armrests are folded away in their most upright position.

Rear seat access

To facilitate access to the rear seats, pull release lever and fold the seat backrest forwards. If necessary, unfasten seat belts from their buckles.

⚠ Warning

Ensure that the backrest returns to its correct position and the seat belt buckles are fastened securely.

Fastening seat belt ⇨ 52.

Seat cushion

Depending on version, the seat cushion can be adjusted to one of 5 positions by pulling the strap located at the front of the seat and sliding seat cushion gently forwards or backwards.

Underseat storage ⇨ 70.

Folding seats

On some variants, the cargo area can be increased by folding up the rear seats.

⚠ Warning

When folding the seat use caution - beware of moving parts. Ensure the seat is secure when completely folded.

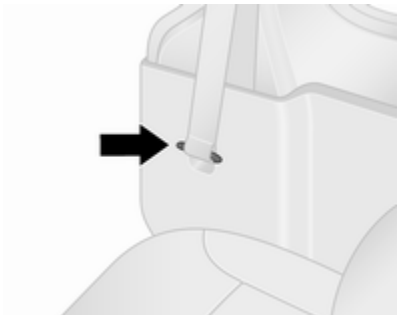

Release seat belts from their buckles and store in the housing.

If necessary, remove the head restraints ⇨ 44.

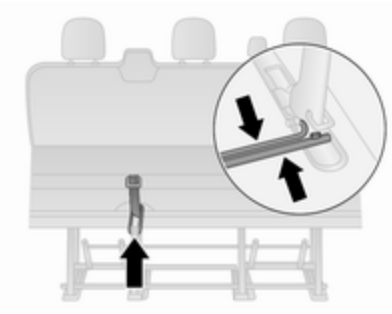

Pull the release strap and fold the backrest onto the seat.

Hold the locking bars and bring them together simultaneously.

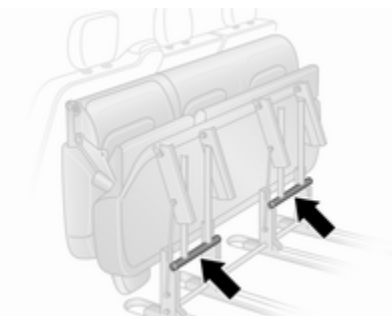

Lift and fold the seat assembly forwards until it engages in the folded forward position.

Lock the seat into position by pushing the rear support legs and ensure they are engaged.

Caution
For safety reasons, do not place loads on the folded rear seats.

When returning the seat assembly to its original position, pull locking bars, carefully lower seat assembly and ensure the rear support legs are correctly located and latched. Raise the backrest, and if necessary, replace the head restraints.

Removable rear seats

On some variants, the cargo area can be increased by removing the rear seats.

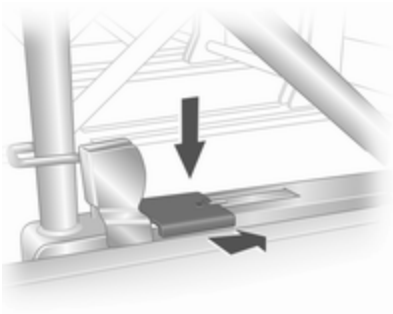

Release the seats by pressing down and sliding forward the locking catches located on the left and right-hand seat mountings.

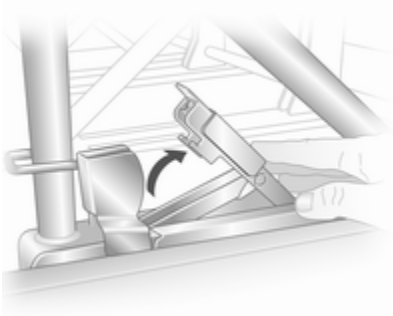

Raise the locking catches, then move the seat unit towards the rear to release from the rear floor anchor points.

Raise the seat unit, then move it towards the rear again to release from the front floor anchor points. The seat unit can then be lifted out.

The seats must be removed through the sliding door only.

⚠ Warning

Removable seats are heavy! Do not attempt to remove without assistance.

When installing the seats, ensure that the seats are properly located on the anchor points and that the locking catches are fully engaged.

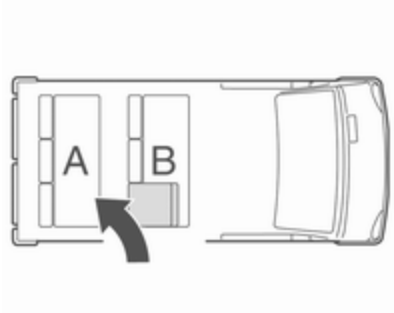

When re-installing seats always ensure that the row with the folding access seat **B** is positioned correctly in front of the fixed seat row **A**.

Seat belts

The seat belts are locked during heavy acceleration or deceleration of the vehicle holding the occupants in the sitting position. Therefore, the risk of injury is considerably reduced.

⚠ Warning

Fasten seat belt before each trip.

In the event of an accident, people not wearing seat belts endanger their fellow occupants and themselves.

Seat belts are only designed for use by one person at a time. Child restraint system ⇨ 61.

Periodically check all parts of the belt system for damage and proper functionality.

Have damaged components replaced. After an accident, have the belts and triggered belt tensioners replaced by a workshop.

Note
Make sure that the belts are not damaged by shoes or sharp-edged objects or trapped. Prevent dirt from getting into the belt retractors.

Seat belt reminder

Front seat is equipped with a seat belt reminder, indicated by control indicator in the roof console ⇨ 87.

Belt force limiters

On the front seats, stress on the body is reduced by the gradual release of the belt during a collision.

Belt tensioners

In the event of a head-on or rear-end collision of a certain severity, the front seat belts are tightened.

⚠ Warning

Incorrect handling (e.g. removal or fitting of belts) can trigger the belt tensioners with risk of injury.

Deployment of the belt tensioners is indicated by continuous illumination of control indicator ⇨ 87.

Triggered belt tensioners must be replaced by a workshop. Belt tensioners can only be triggered once.

Note
Do not affix or install accessories or other objects that may interfere with the operation of the belt tensioners. Do not make any modifications to belt tensioner components as this will invalidate the vehicle type approval.

Three-point seat belt

Fasten

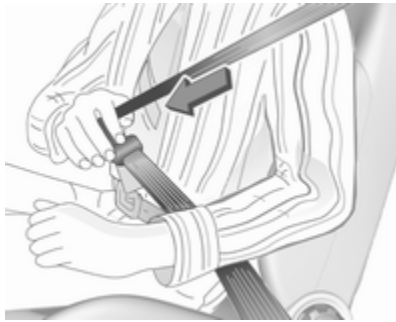

Withdraw the belt from the retractor, guide it untwisted across the body and insert the latch plate into the buckle.

Tighten the lap belt regularly whilst driving by pulling the shoulder belt.

Seat belt reminder ⇨ 87.

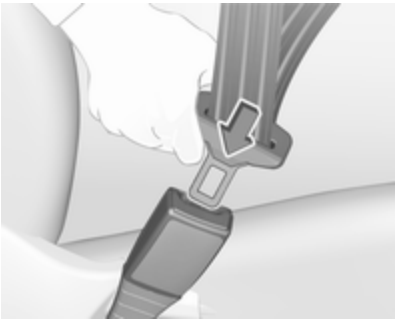

Loose or bulky clothing prevents the belt from fitting snugly. Do not place objects such as handbags or mobile phones between the belt and your body.

⚠ Warning

The belt must not rest against hard or fragile objects in the pockets of your clothing.

Height adjustment

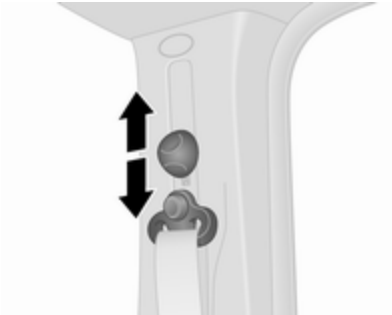

Slide adjuster up or down to desired position:

- Pull belt out slightly.
- Tilt adjuster downwards to disengage then slide height adjustment downwards or push the height adjustment up without tilting adjuster.

Adjust the height so that the belt lies across the shoulder. It must not lie across the throat or upper arm.

⚠ Warning

Do not adjust while driving.

Unfasten

To unfasten belt, press red button on belt buckle.

Seat belts on the rear seats

Two-latch belt

Before fastening the belt, first insert lower latch plate into the left-hand buckle. Guide the upper latch plate with the belt over the lap area and the shoulder (do not twist) and click into right-hand buckle.

To unfasten the seat belt, first press the button on the right-hand buckle and remove upper latch plate. Then press the button on the left-hand buckle and remove lower latch plate. The seat belt retracts automatically.

⚠Warning

The seat belt will not be effective in the event of an accident if the lower latch plate is not correctly fitted.

When unfastening the seat belt, ensure that the right-hand buckle is always released before the left-hand buckle.

Remove latch plates from the buckles before removing seats from the vehicle or to facilitate access to the rear seats.

Rear seats ⇨ 48.

Using the seat belt while pregnant

⚠ Warning

The lap belt must be positioned as low as possible across the pelvis to prevent pressure on the abdomen.

Airbag system

The airbag system consists of a number of individual systems depending on the scope of equipment.

When triggered, the airbags inflate within milliseconds. They also deflate so quickly that it is often unnoticeable during the collision.

⚠ Warning

If handled improperly the airbag systems can be triggered in an explosive manner.

Note
The airbag systems and belt pretensioner control electronics are located in the centre console area. Do not put any magnetic objects in this area.

Do not affix any objects onto the airbag covers and do not cover them with other materials.

Each airbag is triggered only once. Have deployed airbags replaced by a workshop. Furthermore, it may be necessary to have the steering wheel, the instrument panel, parts of the panelling, the door seals, handles and the seats replaced.

Do not make any modifications to the airbag system as this will invalidate the vehicle type approval.

When the airbags inflate escaping hot gases may cause burns.

Control indicator for airbag systems ⇨ 87.

Child restraint systems on front passenger seat with airbag systems

Warning according to ECE R94.02:

EN: NEVER use a rear-facing child restraint system on a seat protected by an ACTIVE AIRBAG in front of it, DEATH or SERIOUS INJURY to the CHILD can occur.

DE: Nach hinten gerichtete Kindersitze NIEMALS auf einem Sitz verwenden, der durch einen davor befindlichen AKTIVEN AIRBAG geschützt ist, da dies den TOD oder SCHWERE VERLETZUNGEN DES KINDES zur Folge haben kann.

FR: NE JAMAIS utiliser un siège d'enfant orienté vers l'arrière sur un siège protégé par un COUSSIN GONFLABLE ACTIF placé devant lui, sous peine d'infliger des BLESSURES GRAVES, voire MORTELLES à l'ENFANT.

ES: NUNCA utilice un sistema de retención infantil orientado hacia atrás en un asiento protegido por un AIRBAG FRONTAL ACTIVO. Peligro de MUERTE o LESIONES GRAVES para el NIÑO.

RU: ЗАПРЕЩАЕТСЯ устанавливать детское удерживающее устройство лицом назад на сиденье автомобиля, оборудованном фронтальной подушкой безопасности, если ПОДУШКА НЕ ОТКЛЮЧЕНА! Это может привести к СМЕРТИ или СЕРЬЕЗНЫМ ТРАВМАМ РЕБЕНКА.

NL: Gebruik NOOIT een achterwaarts gericht kinderzitje op een stoel met een ACTIEVE AIRBAG ervoor, om DODELIJK of ERNSTIG LETSEL van het KIND te voorkomen.

DA: Brug ALDRIG en bagudvendt autostol på et forsæde med AKTIV AIRBAG, BARNET kan komme i LIVSFARE eller komme ALVORLIGT TIL SKADE.

SV: Använd ALDRIG en bakåtvänd barnstol på ett säte som skyddas med en framförvarande AKTIV AIRBAG. DÖDSFALL eller ALLVARLIGA SKADOR kan drabba BARNET.

FI: ÄLÄ KOSKAAN sijoita taaksepäin suunnattua lasten turvaistuinta istuimelle, jonka edessä on AKTIIVINEN TURVATYYNY, LAPSI VOI KUOLLA tai VAMMAUTUA VAKAVASTI.

NO: Bakovervendt barnesikringsutstyr må ALDRI brukes på et sete med AKTIV KOLLISJONSPUTE foran, da det kan føre til at BARNET utsettes for LIVSFARE og fare for ALVORLIGE SKADER.

PT: NUNCA use um sistema de retenção para crianças voltado para trás num banco protegido com um AIRBAG ACTIVO na frente do mesmo, poderá ocorrer a PERDA DE VIDA ou FERIMENTOS GRAVES na CRIANÇA.

IT: Non usare mai un sistema di sicurezza per bambini rivolto all'indietro su un sedile protetto da AIRBAG ATTIVO di fronte ad esso: pericolo di MORTE o LESIONI GRAVI per il BAMBINO!

EL: ΠΟΤΕ μη χρησιμοποιείτε παιδικό κάθισμα ασφαλείας με φορά προς τα πίσω σε κάθισμα που προστατεύεται από μετωπικό ΕΝΕΡΓΟ ΑΕΡΟΣΑΚΟ, διότι το παιδί μπορεί να υποστεί ΘΑΝΑΣΙΜΟ ή ΣΟΒΑΡΟ ΤΡΑΥΜΑΤΙΣΜΟ.

PL: NIE WOLNO montować fotelika dziecięcego zwróconego tyłem do kierunku jazdy na fotelu, przed którym znajduje się WŁĄCZONA PODUSZKA POWIETRZNA. Niezastosowanie się do tego zalecenia może być przyczyną ŚMIERCI lub POWAŻNYCH OBRAŻEŃ u DZIECKA.

TR: Arkaya bakan bir çocuk emniyet sistemini KESİNLİKLE önünde bir AKTİF HAVA YASTIĞI ile korunmakta olan bir koltukta kullanmayınız. ÇOCUK ÖLEBİLİR veya AĞIR ŞEKİLDE YARALANABİLİR.

UK: НІКОЛИ не використовуйте систему безпеки для дітей, що встановлюється обличчям назад, на сидінні з УВІМКНЕНОЮ ПОДУШКОЮ БЕЗПЕКИ, інакше це може призвести до СМЕРТІ чи СЕРЙОЗНОГО ТРАВМУВАННЯ ДИТИНИ.

HU: SOHA ne használjon hátrafelé néző biztonsági gyerekülést előlről AKTÍV LÉGZSÁKKAL védett ülésen, mert a GYERMEK HALÁLÁT vagy KOMOLY SÉRÜLÉSÉT okozhatja.

HR: NIKADA nemojte koristiti sustav zadržavanja za djecu okrenut prema natrag na sjedalu s AKTIVNIM ZRAČNIM JASTUKOM ispred njega, to bi moglo dovesti do SMRTI ili OZBILJNJIH OZLJEDA za DIJETE.

SL: NIKOLI ne nameščajte otroškega varnostnega sedeža, obrnjenega v nasprotni smeri vožnje, na sedež z AKTIVNO ČELNO ZRAČNO BLAZINO, saj pri tem obstaja nevarnost RESNIH ali SMRTNIH POŠKODB za OTROKA.

SR: NIKADA ne koristiti bezbednosni sistem za decu u kome su deca okrenuta unazad na sedištu sa AKTIVNIM VAZDUŠNIM JASTUKOM ispred sedišta zato što DETE može da NASTRADA ili da se TEŠKO POVREDI.

MK: НИКОГАШ не користете детско седиште свртено наназад на седиште заштитено со АКТИВНО ВОЗДУШНО ПЕРНИЧЕ пред него, затоа што детето може ДА ЗАГИНЕ или да биде ТЕШКО ПОВРЕДЕНО.

BG: НИКОГА не използвайте детска седалка, гледаща назад, върху седалка, която е защитена чрез АКТИВНА ВЪЗДУШНА ВЪЗГЛАВНИЦА пред нея - може да се стигне до СМЪРТ или СЕРИОЗНО НАРАНЯВАНЕ на ДЕТЕТО.

RO: Nu utilizați NICIODATĂ un scaun pentru copil îndreptat spre partea din spate a mașinii pe un scaun protejat de un AIRBAG ACTIV în fața sa; acest lucru poate duce la DECESUL sau VĂTĂMAREA GRAVĂ a COPILULUI.

CS: NIKDY nepoužívejte dětský zádržný systém instalovaný proti směru jízdy na sedadle, které je chráněno před sedadlem AKTIVNÍM AIRBAGEM. Mohlo by dojít k VÁŽNÉMU PORANĚNÍ nebo ÚMRTÍ DÍTĚTE.

SK: NIKDY nepoužívajte detskú sedačku otočenú vzad na sedadle chránenom AKTÍVNYM AIRBAGOM, pretože môže dôjsť k SMRTI alebo VÁŽNYM ZRANENIAM DIEŤAŤA.

LT: JOKIU BŪDU nemontuokite atgal atgręžtos vaiko tvirtinimo sistemos sėdynėje, prieš kurią įrengta AKTYVI ORO PAGALVĖ, nes VAIKAS GALI ŽŪTI arba RIMTAI SUSIŽALOTI.

LV: NEKĀDĀ GADĪJUMĀ neizmantojiet uz aizmuguri vērstu bērnu sēdeklīti sēdvietā, kas tiek aizsargāta ar tās priekšā uzstādītu AKTĪVU DROŠĪBAS SPILVENU, jo pretējā gadījumā BĒRNS var gūt SMAGAS TRAUMAS vai IET BOJĀ.

ET: ÄRGE kasutage tahapoole suunatud lapseturvaistet istmel, mille ees on AKTIIVSE TURVAPADJAGA kaitstud iste, sest see võib põhjustada LAPSE SURMA või TÕSISE VIGASTUSE.

MT: QATT tuża trażżin għat-tfal li jħares lejn in-naħa ta' wara fuq sit protett b'AIRBAG ATTIV quddiemu; dan jista' jikkawża l-MEWT jew ĠRIEĦI SERJI lit-TFAL.

Beyond the warning required by ECE R94.02, for safety reasons a forward-facing child restraint system must only be used subject to the instructions and restrictions in the Child restraint installation locations tables ⇨ 62.

The airbag label is located on the front passenger sun visor.

⚠ Danger

Do not use a child restraint system on the passenger seat with active front airbag.

Airbag deactivation ⇨ 59.

Front airbag system

The front airbag system consists of one airbag in the steering wheel and one in the instrument panel on the front passenger side. These can be identified by the word **AIRBAG**.

The front airbag system is triggered in the event of an accident of a certain severity. The ignition must be switched on.

The inflated airbags cushion the impact, thereby reducing the risk of injury to the upper body and head of the front seat occupants considerably.

⚠ Warning

Optimum protection is only provided when the seat is in the proper position.

Seat position ⇨ 45.

Keep the area in which the airbag inflates clear of obstructions.

Fasten the seat belt correctly and engage securely. Only then is the airbag able to protect.

Side airbag system

The side airbag system consists of an airbag in each front seat backrest. This may be identified by the word **AIRBAG**.

The side airbag system is triggered in the event of an accident of a certain severity. The ignition must be switched on.

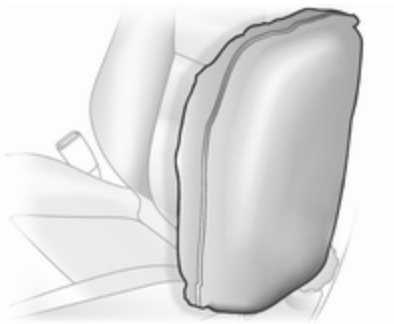

The inflated airbags cushion the impact, thereby reducing the risk of injury to the upper body and pelvis in the event of a side-on collision considerably.

⚠ Warning

Keep the area in which the airbag inflates clear of obstructions.

Note
Only use protective seat covers that have been approved for the vehicle. Be careful not to cover the airbags.

Curtain airbag system

The curtain airbag system consists of an airbag in the roof frame on each side. This may be identified by the word **AIRBAG** on the headlining trim.

The curtain airbag system is triggered in the event of a side-on impact of a certain severity. The ignition must be switched on.

The inflated airbags cushion the impact, thereby reducing the risk of injury to the head in the event of a side-on impact considerably.

⚠ Warning

Keep the area in which the airbag inflates clear of obstructions.

Airbag deactivation

The front passenger airbag system must be deactivated if a child restraint is to be fitted on the front passenger seat in accordance with the instructions in the Child restraint installation locations tables ⇨ 62.

The belt tensioners and all other airbag systems will remain active.

Depending on vehicle, there is a warning on the airbag label located on the front passenger sun visor. Refer to "Airbag system" for further information ⇨ 55.

Front passenger airbag system can be deactivated via a switch located on the side of the instrument panel. Open the front passenger door to access the switch.

Press the switch in and rotate to choose the position:

OFF : front passenger seat airbag system is deactivated and will not inflate in the event of a collision. Control indicator OFF illuminates continuously in the roof console ⇨ 84, ⇨ 87 and a corresponding message appears in the Driver Information Centre (DIC) ⇨ 92.

ON : front passenger airbag system is active.

⚠ Danger

Risk of fatal injury for a child using a child restraint system together with activated front passenger airbag.

Risk of fatal injury for an adult person with deactivated front passenger airbag.

If control indicator ON illuminates after the ignition is switched on and control indicator OFF is not illuminated, the front passenger airbag system will inflate in the event of a collision.

If both control indicators ON and OFF are illuminated simultaneously, there is a system failure. The status of the system is not discernible, therefore no person is permitted to occupy the front passenger seat. Contact a workshop immediately.

If control indicator ⇨ 88 illuminates together with ⇨ 87, this indicates a fault within the system. The switch position may have been changed inadvertently with the ignition on. Turn ignition off and on again and reset the switch position. If and still remain illuminated, seek the assistance of a workshop.

Change status only when the vehicle is stopped with the ignition off. Status remains until the next change.

Control indicator for airbag deactivation ⇨ 87.

Child restraints

Child restraint systems

We recommend the Opel child restraint system which is tailored specifically to the vehicle.

When a child restraint system is being used, pay attention to the following usage and installation instructions and also those supplied with the child restraint system.

Always comply with local or national regulations. In some countries, the use of child restraint systems is forbidden on certain seats.

⚠ Danger

If using a rear-facing child restraint system on the front passenger seat, the airbag system for the front passenger seat must be deactivated. This also applies to certain forward-facing child restraint systems as indicated in the table ⇨ 62.

Airbag deactivation ⇨ 59.

Airbag label ⇨ 55.

Selecting the right system

The rear seats are the most convenient location to fasten a child restraint system.

Children should travel facing rearwards in the vehicle as long as possible. This makes sure that the child's backbone, which is still very weak, is under less strain in the event of an accident.

Suitable are restraint systems that comply with valid UN ECE regulations. Check local laws and regulations for mandatory use of child restraint systems.

Ensure that the child restraint system to be installed is compatible with the vehicle type.

Ensure that the mounting location of the child restraint system within the vehicle is correct, see following tables.

Allow children to enter and exit the vehicle only on the side facing away from the traffic.

When the child restraint system is not in use, secure the seat with a seat belt or remove it from the vehicle.

Note

Do not affix anything on the child restraint systems and do not cover them with any other materials.

A child restraint system which has been subjected to stress in an accident must be replaced.

Child restraint installation locations

Permissible options for fitting a child restraint system

Front seats - Van

	Single front passenger seat[1]		Double front passenger seat		
				deactivated or without airbag	
Weight and age class	activated airbag	deactivated or without airbag	activated airbag	centre	outer
Group 0: up to 10 kg or approx. 10 months **Group 0+: up to 13 kg** or approx. 2 years	X	U	X	X	U
Group I: 9 to 18 kg or approx. 8 months to 4 years	X	U	X	X	U
Group II: 15 to 25 kg or approx. 3 to 7 years **Group III: 22 to 36 kg** or approx. 6 to 12 years	X	U	X	X	U

[1] : Forward-facing child restraints: Remove head restraint ⇨ 44. Slide seat as far back as possible. Set seat height to highest position. Maximum backrest rake is 25°. Seat adjustment ⇨ 46.

Front seats - Combi, Double cab

	Single front passenger seat[1]		Double front passenger seat		
				deactivated or without airbag	
Weight and age class	activated airbag	deactivated or without airbag	activated airbag	centre	outer
Group 0: up to 10 kg or approx. 10 months **Group 0+: up to 13 kg** or approx. 2 years	X	U	X	X	U
Group I: 9 to 18 kg or approx. 8 months to 4 years	X	U[2]	X	X	U[2]
Group II: 15 to 25 kg or approx. 3 to 7 years **Group III: 22 to 36 kg** or approx. 6 to 12 years	X	X	X	X	X

[1] : If adjustable, slide seat as far back as possible and set seat height to highest position. Maximum backrest rake is 25°. Seat adjustment ⇨ 46.

[2] : Rear-facing child restraints only for this weight and age class.

Rear seats - Combi, Double cab

Weight and age class	2nd row seats[1]	3rd row seats
Group 0: up to 10 kg or approx. 10 months **Group 0+: up to 13 kg** or approx. 2 years	U	U
Group I: 9 to 18 kg or approx. 8 months to 4 years	U[2]	U[2]
Group II: 15 to 25 kg or approx. 3 to 7 years **Group III: 22 to 36 kg** or approx. 6 to 12 years	U[2]	U[2]

[1] : If necessary, slide adjustable front seat forwards to install a child restraint system on these seats. There may not be enough clearance to install particular child restraint systems on vehicles fitted with fixed front seats.

[2] : Forward-facing child restraints: Remove head restraint ⇨ 44 before installing child restraint. The seat in front of this installation position must not be more than halfway back on its runners. Maximum backrest rake is 25°. Seat adjustment ⇨ 46.

U : Suitable for universal category restraint systems for use in this weight and age class, in conjunction with three-point seat belt.

X : Seat position not suitable for children in this weight and age class.

Permissible options for fitting an ISOFIX child restraint system

Weight class	Size class	Fixture	Front seats	2nd row seats[1]			3rd row seats
				Centre	Outer		
					vehicles with single passenger seat	vehicles with double passenger seat	
Group 0: up to 10 kg or approx. 10 months	E	ISO/R1	X	X	IL	IL	X
Group 0+: up to 13 kg or approx. 2 years	E	ISO/R1	X	X	IL	IL	X
	D	ISO/R2	X	X	IL	X	X
	C	ISO/R3	X	X	IL	X	X
Group I: 9 to 18 kg or approx. 8 months to 4 years	D	ISO/R2	X	X	IL	X	X
	C	ISO/R3	X	X	IL	X	X
	B	ISO/F2	X	X	IL, IUF[2]	IL, IUF[2]	X
	B1	ISO/F2X	X	X	IL, IUF[2]	IL, IUF[2]	X
	A	ISO/F3	X	X	IL, IUF[2]	IL, IUF[2]	X
Group II: 15 to 25 kg or approx. 3 to 7 years			X	X	IL, IUF[2]	IL, IUF[2]	X
Group III: 22 to 36 kg or approx. 6 to 12 years			X	X	IL, IUF[2]	IL, IUF[2]	X

[1] : If necessary, slide adjustable front seat forwards to install a child restraint system on these seats. There may not be enough clearance to install a child restraint system on vehicles fitted with fixed front seats.
[2] : Forward-facing child restraints: Remove head restraint ⇨ 44 before installing child restraint. The seat in front of this installation position must not be more than halfway back on its runners. Maximum backrest rake is 25°. Seat adjustment ⇨ 46.

IUF : Suitable for ISOFIX forward-facing child restraint systems of universal category approved for use in this weight class.
X : No ISOFIX child restraint system approved in this weight class.
IL : Suitable for particular ISOFIX restraint systems of the 'specific-vehicle', 'restricted' or 'semi-universal' categories. The ISOFIX restraint system must be approved for the specific vehicle type.

ISOFIX size class and seat device

A - ISO/F3 : Forward-facing child restraint system for children of maximum size in the weight class 9 to 18 kg.
B - ISO/F2 : Forward-facing child restraint system for smaller children in the weight class 9 to 18 kg.
B1 - ISO/F2X : Forward-facing child restraint system for smaller children in the weight class 9 to 18 kg.
C - ISO/R3 : Rear-facing child restraint system for children of maximum size in the weight class up to 18 kg.
D - ISO/R2 : Rear-facing child restraint system for smaller children in the weight class up to 18 kg.
E - ISO/R1 : Rear-facing child restraint system for young children in the weight class up to 13 kg.

Isofix child restraint systems

ISOFIX mounting brackets are indicated by the ISOFIX logo or symbol on the seat cushion.

Fasten vehicle-approved ISOFIX child restraint systems to the ISOFIX mounting brackets.

When using ISOFIX mounting brackets for seat mounting, universally approved child restraint systems for ISOFIX may be used.

Permissible mounting location positions for ISOFIX child restraint systems are marked in the tables by +, IL and IUF.

Top-tether fastening eyes

Top-Tether fastening eyes are located on the back of the seat.

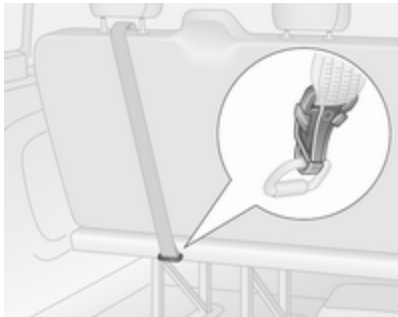

In addition to the ISOFIX mounting, fasten the Top-Tether strap to the Top-Tether fastening eyes. The strap must run between the two guide rods of the head restraint.

ISOFIX child restraint systems of universal category positions are marked in the table by IUF.

Storage

Storage compartments **68**
Instrument panel storage 68
Glovebox 68
Cupholders 69
Front storage 69
Door panel storage 70
Underseat storage 70
Overcab storage 72
Load compartment **72**
Load compartment cover 72
Lashing eyes 73
Safety net 73
Warning triangle 74
First aid kit 74
Roof rack system **74**
Roof rack 74
Loading information **75**

Storage compartments

⚠ Warning

Do not store heavy or sharp objects in the storage compartments. Otherwise, the storage compartment lid could open and vehicle occupants could be injured by objects being thrown around in the event of hard braking, a sudden change in direction or an accident.

Instrument panel storage

Storage compartments, pockets and trays are located in the instrument panel.

A coin holder, a phone holder, and a tablet holder may be located on the instrument panel.

The tray located on top of the instrument panel has a lid.

Glovebox

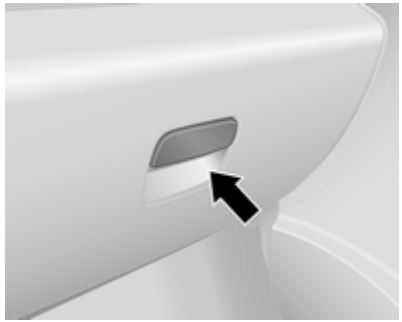

To open, pull the handle.

Depending on version, the glovebox may feature a light that comes on when the glovebox is opened, and may also be lockable.

The glovebox should be closed while driving.

Cupholders

Cupholders are located at both ends of the instrument panel, centrally in the lower instrument panel, and depending on version, also in the door pockets and in the rear seat area.

Additional cupholders are located on the back of the folded down centre rear seat ⇨ 69, ⇨ 48.

The cupholders can also be used to hold the portable ashtray unit. Remove the portable ashtray unit to use the cupholders.

Ashtrays ⇨ 81.

Front storage

Coat hooks are located on the cabin bulkhead and on the grab handles in the roof lining.

Folding centre seatback

The centre seat backrest, when folded fully forwards, features a storage compartment, cupholder and a document tray.

Press button (arrowed) on rear side of backrest to unlock the document tray and access the storage compartments.

To install the document tray, insert the end piece(s) into any of the slots by the cupholder.

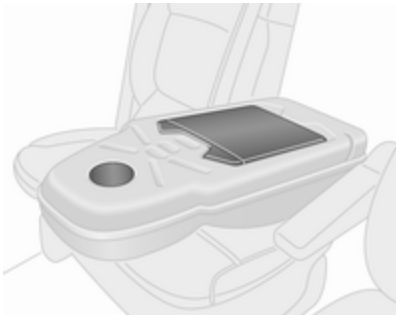

The document tray must always be returned to its original position before raising the seat backrest.

If necessary, secure objects with the strap.

When the storage compartment is closed, it is possible to run a charging cord from an item in the storage compartment through the notch, e.g. to connect devices to a power outlet.

Power outlets ⇨ 80.

Door panel storage

The front and rear door pockets contain bottle holders and depending on version, a holder for cups or ashtrays.

Underseat storage

On some variants, a storage box is located under the front seat. Pull storage box to remove.

Bench seats may also contain a storage compartment at the lower front part of the seat.

Using the straps on the passenger seat cushion, pull the cushion forwards to gain access to the storage under the seat cushion.

Double cab - Underseat storage

Depending on version, bench seats contain removable storage boxes beneath some of the seat cushions.

Opening

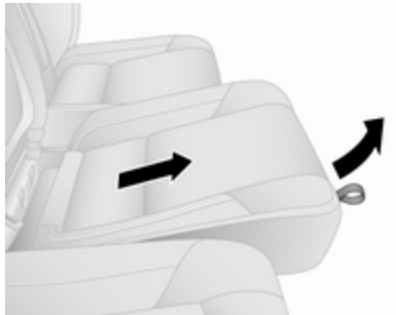

To access each storage box, first release the seat cushion by grasping the strap located at the front edge of the cushion and pulling the cushion up, then slide the seat cushion gently forwards.

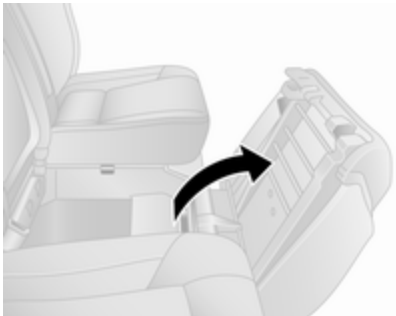

Then pull up the rear of the seat cushion to flip open.

Removing

The storage box can also be removed when the seat cushion is flipped opened. Pull up to remove the retaining ring from inside the box, then slide the box out from beneath the seat.

Replace the storage box when not in use.

Closing

To close; fold down seat cushion, push it slightly rearwards then press front part of cushion downwards to engage.

When folded down, pulling the strap also allows you to adjust the position of the seat cushion to suit personal requirements.

Seat adjustment ⇨ 46, Rear seats ⇨ 48.

Load-through feature

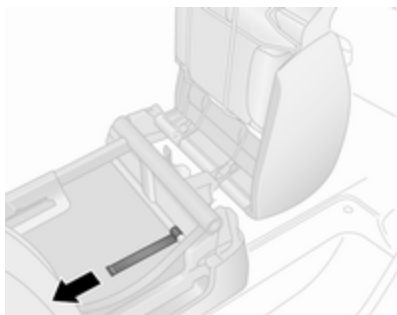

To enable long items to be stored under the rear seats (on the front passenger side of the vehicle only), the lower trim flaps can be released.

First pull the strap on the passenger seat cushion to raise the seat, then tilt front flap inwards by pulling the tab behind the seat (see illustration).

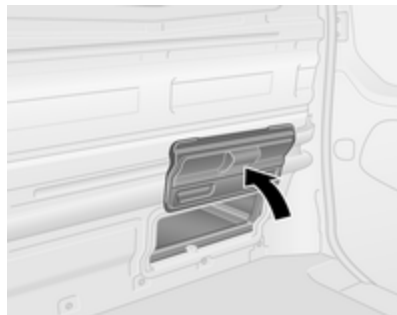

Fold up the rear flap by hand; it is retained in the open position by magnets.

⚠Warning

Passengers must not use the seat when transporting objects beneath it with the lower trim flaps opened.

Overcab storage

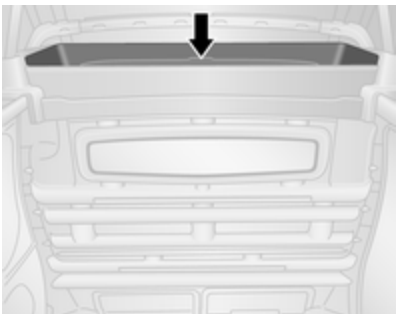

The total weight in this compartment must not exceed 35 kg.

Load compartment

Do not attach items to or hang items on the upper or lower struts on either side of the load compartment.

⚠Warning

Always make sure that the load in the vehicle is securely stowed. Otherwise objects can be thrown around inside the vehicle and cause personal injury or damage to the load or car.

Load compartment cover

Rear parcel shelf

Do not place any excessively heavy or sharp-edged objects on the rear parcel shelf.

The maximum load permissible is 50 kg.

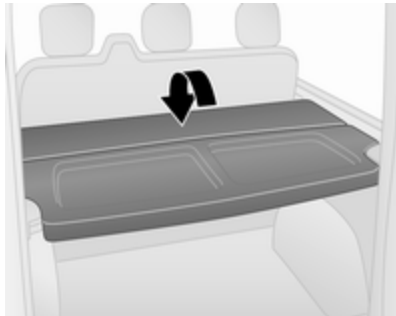

The rear parcel shelf can be installed in 2 positions, i.e. the upper position or the lower position.

The rear parcel shelf may also be folded up, allowing for greater flexibility in the load compartment.

Removing

To remove, release parcel shelf from its retainers on both sides.

If the rear seats ⇨ 48 are in the folded position, remove the parcel shelf and store it horizontally in front of the folded rear seats.

Installing
Refit the parcel shelf by engaging in the retainers on both sides.

Lashing eyes

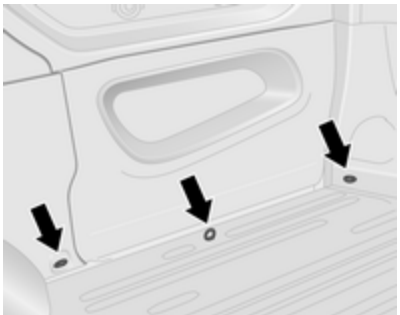

Lashing eyes are mounted in the load compartment to enable cargo to be secured against slippage using lashing straps or a luggage floor net.

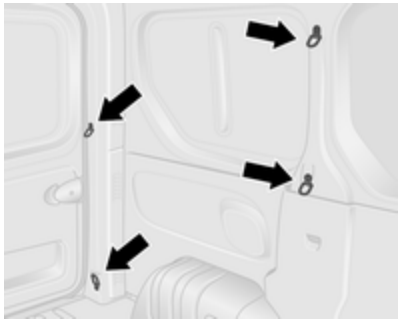

Lashing eyes may be located on the vehicle floor and/or in the sidewall. The number and location of the lashing eyes may vary depending on the vehicle.

The maximum force applied to the lashing eyes should not exceed 6250 N at 30°.

Safety net

The safety net can be installed behind the front seats or the rear seats.

Passengers must not be transported behind the safety net.

Installing

Release the covers in the roof lining (using a flat blade screwdriver) to access the mountings, then insert the load compartment net rods into the left and right mounting locations and secure.

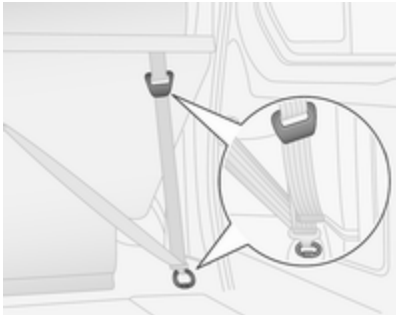

Attach the straps to the lashing eyes or rings behind the seats, then tension the straps.

Removal

Release tension from straps and unhook straps from lashing eyes or rings. Remove net rods from their mounting locations and close the covers.

Warning triangle

The warning triangle can be accommodated in the space under the seats.

Underseat storage ⇨ 70.

First aid kit

The first aid kit can be accommodated in the space under the seats.

Underseat storage ⇨ 70.

Roof rack system

Roof rack

For safety reasons and to avoid damage to the roof, the vehicle approved roof rack system is recommended. For further information, contact your workshop.

Follow the installation instructions and remove the roof rack when not in use.

Note
If tyres of size 215/60 R17 C are fitted, consult a workshop before installing a roof rack.

Refer to "Loading information" below for further information.

Loading information

- Heavy objects in the load compartment should be evenly distributed and placed as far forward as possible. If objects can be stacked, the heavier objects should be placed at the bottom.
- Secure objects with lashing straps attached to lashing eyes ⇨ 73.
- Secure loose objects in load compartment to prevent sliding.
- When transporting objects in the load compartment, the backrests of the rear seats must not be angled forward.
- Do not allow the load to protrude above the upper edge of the backrests.
- Do not place any objects on the instrument panel.
- The load must not obstruct the operation of the pedals, parking brake and gear selector, or hinder the freedom of movement of the driver. Do not place any unsecured objects in the interior.
- Do not drive with an open load compartment. In addition, the number plate is only distinguishable and illuminated correctly if the doors are closed.

⚠ Warning

Always make sure that the load in the vehicle is securely stowed. Otherwise objects can be thrown around inside the vehicle and cause personal injury or damage to the load or car.

- The payload is the difference between the permitted gross vehicle weight (see identification plate ⇨ 188) and the EC kerb weight.

  To calculate the payload, enter the data for your vehicle in the Weights table at the front of this manual.

  The EC kerb weight includes weights for the driver (68 kg), luggage (7 kg) and all fluids (fuel tank 90% full).

  Optional equipment and accessories increase the kerb weight.
- Driving with a roof load increases the sensitivity of the vehicle to cross-winds and has a detrimental effect on vehicle handling due to the vehicle's higher centre of gravity. Distribute the load evenly and secure it properly with retaining straps. Adjust the tyre pressure and vehicle speed according to the load conditions. Check and retighten the straps frequently.

  Do not drive faster than 120 km/h.

  The permissible roof load is 200 kg for H1 Roof height variants and 150 kg for H2 Roof height variants (excludes Platform cab conversions). The roof load is the combined weight of the roof rack and the load.

Instruments and controls

Controls **77**
Steering wheel adjustment 77
Steering wheel controls 77
Horn 77
Steering column controls 77
Windscreen wiper/washer 78
Rear window wiper/washer 79
Outside temperature 79
Clock 79
Power outlets 80
Cigarette lighter 81
Ashtrays 81
Warning lights, gauges and indicators **81**
Instrument cluster 81
Speedometer 81
Odometer 82
Trip odometer 82
Tachometer 82
Fuel gauge 83
Fuel economy gauge 83
Service display 83
Control indicators 84
Turn signal 86
Seat belt reminder 87
Airbag and belt tensioners 87
Airbag deactivation 87
Charging system 88
Malfunction indicator light 88
Service vehicle soon 88
Stop engine 88
Brake system 88
Antilock brake system (ABS) 89
Upshift 89
Electronic Stability Program 89
Electronic Stability Program off 89
Engine coolant temperature 89
Preheating 90
AdBlue 90
Tyre pressure monitoring system 90
Engine oil pressure 90
Fuel economy mode 91
Low fuel 91
Autostop 91
Exterior light 91
High beam 91
Fog light 92
Rear fog light 92
Cruise control 92
Tachograph 92
Door open 92
Information displays **92**
Driver Information Centre 92
Vehicle messages **93**
Warning chimes 94
Engine oil level 94
Trip computer **95**
Tachograph **97**

Controls

Steering wheel adjustment

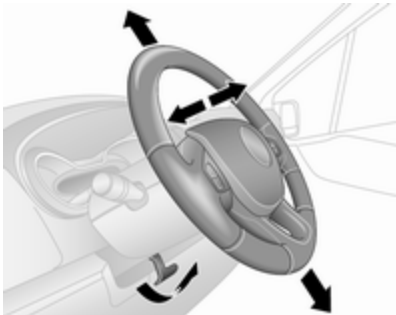

Unlock lever, adjust steering wheel, then engage lever and ensure it is fully locked.

Do not adjust steering wheel unless vehicle is stationary and steering wheel lock has been released.

Steering wheel controls

The cruise control and speed limiter can be operated via the controls on the steering wheel.

Cruise control and speed limiter ⇨ 135.

Horn

Press .

The horn will sound regardless of ignition switch position.

Steering column controls

The Infotainment system and a connected mobile phone can be operated via the controls on the steering column.

Further information is available in the Infotainment manual.

Windscreen wiper/washer

Windscreen wiper

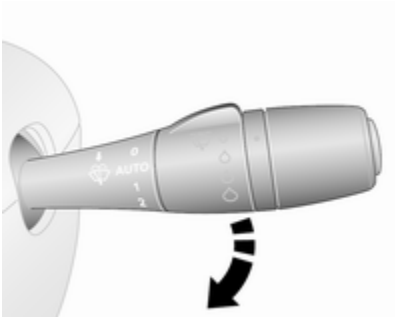

0	:	off
AUTO or	:	interval wiping or automatic wiping with rain sensor
1	:	slow
2	:	fast

Do not use if the windscreen is frozen.

Switch off in car washes.

Adjustable wiper interval

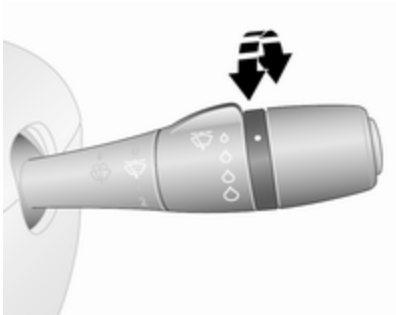

Wiper lever in position **AUTO** or .

Turn the adjuster wheel to adjust the desired wipe interval:

short interval	:	turn adjuster wheel upwards
long interval	:	turn adjuster wheel downwards

Automatic wiping with rain sensor

Wiper lever in position **AUTO** or .

The rain sensor detects the amount of water on the windscreen and automatically regulates the frequency of the windscreen wiper.

Automatic wiping will need to be reselected whenever the ignition has been switched off.

Adjustable sensitivity of the rain sensor

Turn the adjuster wheel to adjust the sensitivity:

low sensitivity	:	turn adjuster wheel upwards
high sensitivity	:	turn adjuster wheel downwards

The rain sensor is located on the windscreen. Keep the sensor free from dust, dirt and ice.

Windscreen washer

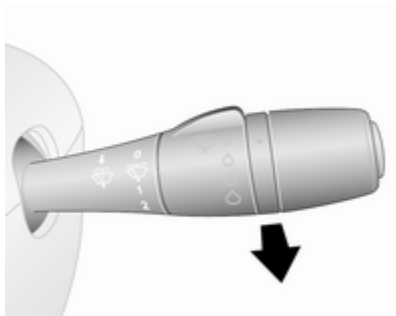

Pull lever. Washer fluid is sprayed onto the windscreen.

short pull : wiper swipes once
long pull : wiper swipes for a few strokes

Rear window wiper/washer

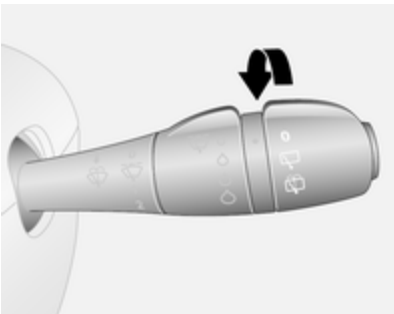

Turn lever:

0 : off
: wiper operation
: washer fluid is sprayed onto the rear window

The rear window wiper comes on automatically when the windscreen wiper is switched on and reverse gear is engaged.

Outside temperature

A drop in temperature is indicated immediately and a rise in temperature after a time delay.

If outside temperatures drop to 3 °C, the **°C** flashes in the Driver Information Centre (DIC) as a warning for icy road conditions. This will continue to flash until temperatures rise above 3 °C.

⚠ Warning

The road surface may already be icy even though the display indicates a few degrees above 0 °C.

Clock

Depending on vehicle, the current time may appear in the central information display and/or the Driver Information Centre (DIC).

Info-display:

Hours and minutes can be adjusted by pressing the appropriate buttons by the display or with the Infotainment system controls.

For further information, refer to the Infotainment system manual.

DIC:

Display the clock setting function by pressing the button repeatedly on the end of the wiper lever.

Press and hold the button for approx. 5 seconds:

- hours flash
- press button repeatedly to change hours
- wait for approx. 5 seconds to set hours
- minutes flash
- press button repeatedly to change minutes
- wait for approx. 5 seconds to set minutes

Driver Information Centre (DIC) ⇨ 92.

Power outlets

12 V power outlets are located on the instrument panel and in the rear of the vehicle. Fold the cover upwards.

Depending on vehicle, additional outlets may be located at the outer edge of the bench seat.

Connecting electrical accessories while the engine is off will discharge the vehicle battery. Do not exceed the maximum power consumption of 120 Watts. Do not connect any current-delivering accessories, e.g. electrical charging devices or batteries.

Electrical accessories that are connected must comply with the electromagnetic compatibility requirements laid down in DIN VDE 40 839.

Caution
Do not connect any current-delivering accessories, e.g. electrical charging devices or batteries. Do not damage the outlets by using unsuitable plugs.

Cigarette lighter

The cigarette lighter is located on the instrument panel.

Press in cigarette lighter. It switches off automatically once the element is glowing. Pull out lighter.

Ashtrays

Caution
To be used only for ash and not for combustible rubbish.

Portable ashtray

Ashtray container for mobile use in the vehicle. To use, open cover.

Ashtrays can be placed in the cupholders at both ends of the instrument panel, centrally in the lower instrument panel, and depending on version, in the door pockets or in the rear seat area.

Cupholders ⇨ 69.

Warning lights, gauges and indicators

Instrument cluster

In some versions, the needles of the instruments briefly rotate to the end position when the ignition is switched on.

Speedometer

Indicates vehicle speed.

Speed limiter

Maximum speed may be restricted by a speed limiter. As a visible indication of this, a warning label is located on the instrument panel.

A warning buzzer will sound for 10 seconds every 40 seconds if the vehicle briefly exceeds the set limit.

Note
Under certain conditions (e.g. steep inclines), the vehicle speed may exceed the set limit.

Speed limiter ⇨ 138, cruise control speed limiter ⇨ 135.

Odometer

Displays the recorded distance.

Trip odometer

The trip odometer appears below the odometer in the Driver Information Centre (DIC) and displays the distance travelled since the last reset.

To reset, with the trip odometer displayed, press and hold button on end of wiper lever for a few seconds with the ignition on. The display will flash and the value will reset to zero.

Driver Information Centre (DIC) ⇨ 92.

Tachometer

Displays the engine speed.

Drive in a low engine speed range for each gear as much as possible.

Caution
If the needle is in the yellow warning zone, the maximum permitted engine speed is exceeded. Engine at risk.

Fuel gauge

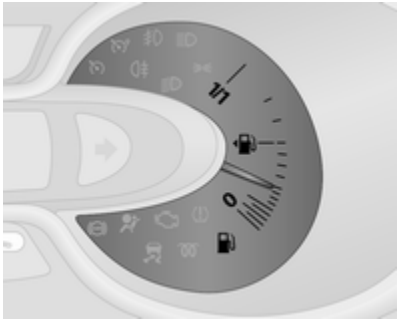

Displays fuel level in the tank.

Control indicator ⛽ also illuminates in instrument cluster ⇨ 84 when fuel level is low (range of approx. 50 km): refuel immediately ⇨ 143.

Never run the tank dry.

Diesel fuel system, bleeding ⇨ 154.

Note
To ensure the fuel level is displayed correctly, the ignition must be switched off before refuelling. Avoid minor fuel top-ups (e.g. less than 5 litres) to ensure accurate readings.

Because of the fuel remaining in the tank, the top-up quantity may be less than the specified tank capacity.

Fuel economy gauge

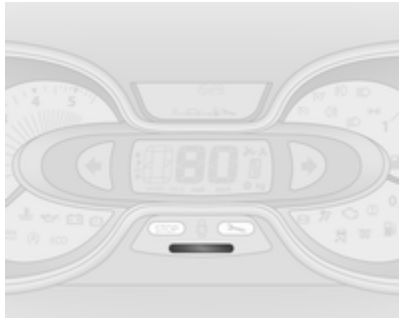

The fuel economy gauge provides an instantaneous calculation of fuel efficiency based on current driving style.

The gauge uses colours to indicate current fuel efficiency:

Green : best fuel economy is being achieved
Yellow : driving style too aggressive
Orange : least efficient fuel economy

The fuel economy gauge is enabled by default. It can be disabled via the Infotainment system. Refer to Infotainment system manual for further information.

Service display

When the ignition is switched on, the remaining distance before the next service is due may be shown briefly in the Driver Information Centre (DIC). Based on driving conditions, the interval at which a service will be indicated can vary considerably.

The distance before service display can also be shown by pressing button on end of wiper lever for approx. 5 seconds.

When the remaining distance before the next service is less than 1500 km or 1 month, a message appears in the DIC.

When the distance reaches 0 km or the service date is due, control indicator 🔧 illuminates in the instrument cluster and the DIC respectively, and a corresponding message appears in the DIC.

The vehicle needs a service. Seek the assistance of a workshop.

Resetting the service display

After a service, the service display must be reset:

Select the distance before service display in the DIC, then press and hold button on end of wiper lever for approx. 10 seconds.

Trip computer ⇨ 95.

Driver Information Centre (DIC) ⇨ 92.

Service information ⇨ 183.

Control indicators

The control indicators described are not present in all vehicles. The description applies to all instrument versions.

Depending on the equipment the position of the control indicators may vary.

When the ignition is switched on, most control indicators will illuminate briefly as a functionality test.

The control indicator colours mean:

red	:	danger, important reminder
yellow	:	warning, information, fault
green	:	confirmation of activation
blue	:	confirmation of activation
white	:	confirmation of activation

Control indicators in the instrument cluster

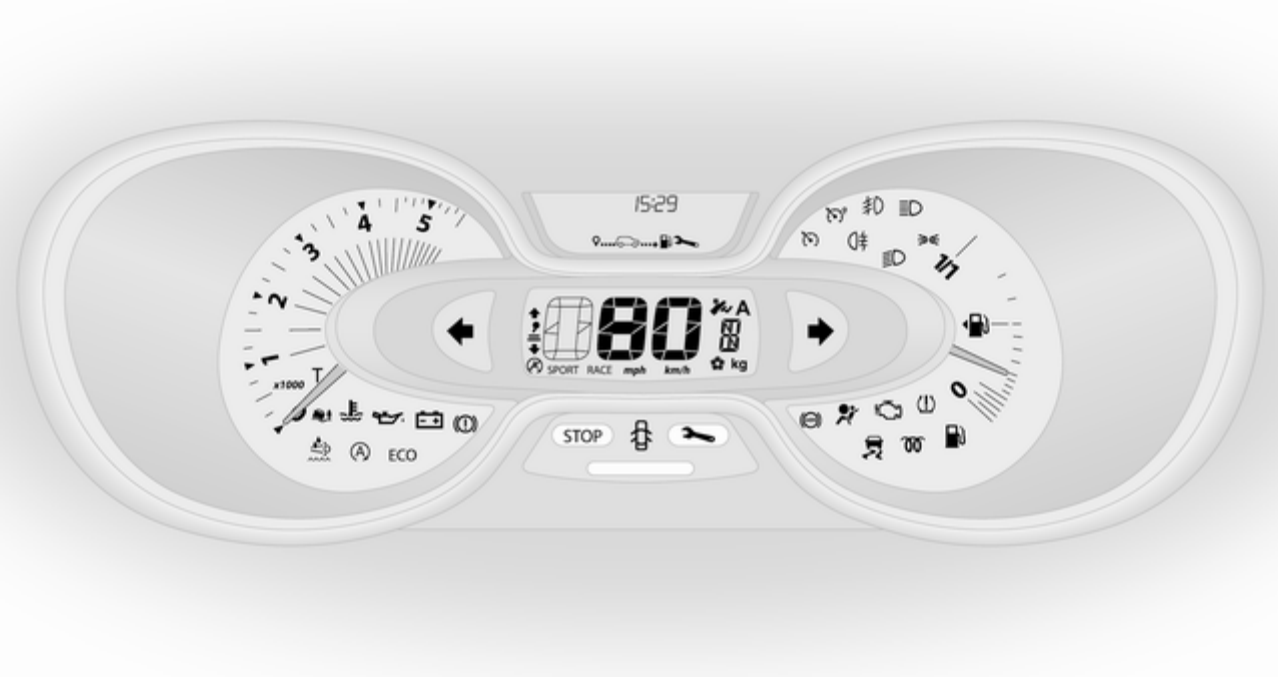

Control indicators in the roof console

Overview

	Turn signal ⇨ 86
	Seat belt reminder ⇨ 87
	Airbag and belt tensioners ⇨ 87
ON	Airbag activation ⇨ 87
OFF	Airbag deactivation ⇨ 87
	Charging system ⇨ 88
	Malfunction indicator light ⇨ 88
	Service vehicle soon ⇨ 88
STOP	Stop engine ⇨ 88
	Brake system ⇨ 88
ABS	Antilock brake system (ABS) ⇨ 89
	Upshift, downshift ⇨ 89
	Electronic Stability Program ⇨ 89
	Electronic Stability Program off ⇨ 89
	Engine coolant temperature ⇨ 89
	Preheating ⇨ 90
	AdBlue ⇨ 90
	Tyre pressure monitoring system ⇨ 90
	Engine oil pressure ⇨ 90
ECO	Fuel economy mode ⇨ 91
	Low fuel ⇨ 91
A	Autostop ⇨ 91
	Autostop inhibited ⇨ 91
D	Exterior light ⇨ 91
	Exterior light ⇨ 91
D	High beam ⇨ 91
D	Fog light ⇨ 92
	Rear fog light ⇨ 92
	Cruise control ⇨ 92
	Cruise control speed limiter ⇨ 92
T	Tachograph ⇨ 92
	Door open ⇨ 92

Turn signal

⇦⇨ flashes green.

Flashes if a turn signal or the hazard warning flashers are activated.

Rapid flashing: failure of a turn signal light or associated fuse.

An audible warning can be heard when the turn signals are on.

Bulb replacement ⇨ 156.

Fuses ⇨ 161.

Turn signals ⇨ 101.

Seat belt reminder

illuminates or flashes red.

If the seat belt is unfastened, control indicator will flash when vehicle speed exceeds approx. 16 km/h. A warning chime also sounds for up to 2 minutes.

If the seat belt is fastened, the indicator light extinguishes.

Note
Heavy objects on the front seats may cause control indicator to illuminate. Remove the object from the seat or fasten the seat belt.

⚠ Warning

Fasten seat belt before each trip.

In the event of an accident, people not wearing seat belts endanger their fellow occupants and themselves.

Three-point seat belts ⇨ 52.

Airbag and belt tensioners

illuminates yellow.

Illuminates briefly when the ignition is switched on.

If it does not illuminate or illuminates whilst driving, there is a fault in the belt tensioner or the airbag system. The airbags and belt tensioners may fail to trigger in the event of an accident.

Deployment of the belt tensioners or airbags is indicated by continuous illumination of .

⚠ Warning

Have the cause of the fault remedied immediately by a workshop.

Belt tensioners, airbag system ⇨ 51, ⇨ 55.

Airbag deactivation

ON illuminates yellow.

The front passenger airbag is activated.

OFF illuminates yellow.

The front passenger airbag is deactivated ⇨ 59.

If both control indicators ON and OFF are illuminated simultaneously, there is a system failure. The status of the system is not discernible, therefore no person is permitted to occupy the front passenger seat. Contact a workshop immediately.

If illuminated in conjunction with or , seek the assistance of a workshop.

⚠ Danger

Risk of fatal injury for a child using a child restraint system together with activated front passenger airbag.

Risk of fatal injury for an adult person with deactivated front passenger airbag.

Airbag system ⇨ 55, belt tensioners ⇨ 51, airbag deactivation ⇨ 59.

Charging system

illuminates red.

Illuminates briefly when the ignition is switched on.

Illuminates when the engine is running

If control indicator illuminates when the engine is running (together with control indicator STOP and a warning chime): Stop, switch off engine.

Vehicle battery is not charging. Engine cooling may be interrupted. Power to the brake servo unit may be cut. Seek the assistance of a workshop.

Malfunction indicator light

illuminates or flashes yellow.

Illuminates briefly when the ignition is switched on.

Illuminates when the engine is running

Fault in the emission control system. The permitted emission limits may be exceeded. Seek the assistance of a workshop immediately.

Flashes when the engine is running

Fault that could lead to catalytic converter damage. Ease up on the accelerator until the flashing stops. Seek the immediate assistance of a workshop.

Service vehicle soon

illuminates yellow.

Illuminates briefly when the ignition is switched on.

May illuminate together with other control indicators and a corresponding message in the Driver Information Centre (DIC) ⇨ 92. Seek the assistance of a workshop immediately.

Stop engine

STOP illuminates red.

Illuminates briefly when the ignition is switched on.

Illuminates together with other control indicators (e.g., , and), accompanied by a warning chime and a corresponding message in the Driver Information Centre (DIC) ⇨ 92: stop engine immediately and seek the assistance of a workshop.

Brake system

illuminates red.

Illuminates after the ignition is switched on if the parking brake is applied ⇨ 131 and extinguishes when the parking brake is released.

Illuminates when the parking brake is released if the brake fluid level is too low ⇨ 152.

⚠ Warning

Stop. Do not continue your journey. Consult a workshop.

If (!) illuminates together with control indicator STOP and a warning chime, there is a fault in the braking system. A corresponding message also appears in the Driver Information Centre (DIC) ⇨ 92. Seek the assistance of a workshop immediately.

Brake system ⇨ 130.

Antilock brake system (ABS)

(ABS) illuminates yellow.

Illuminates briefly after the ignition is switched on. The system is ready for operation when (ABS) extinguishes.

If control indicator (ABS) does not go out after a few seconds, or if it illuminates while driving, there is a fault in the ABS. Control indicator 🔧 may also illuminate in the instrument cluster together a corresponding message in the Driver Information Centre (DIC) ⇨ 92. The brake system remains operational but without ABS regulation.

If control indicators (ABS), 🔧, (!) and STOP illuminate, there is a fault in the braking system. A corresponding message appears in the DIC. Seek the assistance of a workshop immediately.

Antilock brake system (ABS) ⇨ 131.

Upshift

⇧ or ⇧ illuminates.

It is recommended to shift gear when illuminated to improve fuel economy.

Electronic Stability Program

flashes or illuminates yellow.

Illuminates briefly when the ignition is switched on.

Flashing during driving

The system is actively engaged. Engine output may be reduced and the vehicle may be braked automatically to a small degree.

Illuminates while driving

The system is not available. A corresponding message also appears in the Driver Information Centre (DIC) ⇨ 92.

ESP®Plus ⇨ 133, Traction Control system ⇨ 132.

Electronic Stability Program off

illuminates green.

If ESP®Plus has been deactivated with on the instrument panel, control indicator illuminates and a corresponding message appears in the Driver Information Centre (DIC) ⇨ 92.

ESP®Plus ⇨ 133, Traction Control system ⇨ 132.

Engine coolant temperature

illuminates blue or red.

Illuminates red briefly when the ignition is switched on, then turns blue.

Illuminates red when the engine is running

Stop, switch off engine.

Caution
Coolant temperature too high.

Check coolant level ⇨ 150.

If there is sufficient coolant, consult a workshop.

The control indicator must be blue before continuing driving.

Preheating

illuminates yellow.

Preheating is activated. Only activates when outside temperature is low.

AdBlue

illuminates yellow.

AdBlue level is low. Refill AdBlue as soon as possible, to avoid prevention of engine starts.

Illuminates together with control indicator to indicate a system failure or as a warning that engine starting may not be possible after a certain distance. Seek the assistance of a workshop immediately.

A corresponding message appears in the Driver Information Centre (DIC) ⇨ 92.

Adblue percentage remaining can also be checked by pressing button repeatedly on end of wiper lever. Trip computer ⇨ 95.

AdBlue ⇨ 125.

Tyre pressure monitoring system

illuminates or flashes yellow.

Illuminates briefly when the ignition is switched on.

Illuminates

Tyre pressure loss. Stop immediately and check tyre pressure.

Control indicator illuminates together with STOP ⇨ 88 and a corresponding message appears in the Driver Information Centre (DIC) when a puncture or severely under-inflated tyre is detected.

Flashes

Fault in system. After a delay the control indicator illuminates continuously. Consult a workshop.

Control indicator illuminates together with ⇨ 88 and a corresponding message appears in the DIC when a tyre without a pressure sensor is mounted (e.g. spare wheel).

Tyre pressure monitoring system (TPMS) ⇨ 168.

Engine oil pressure

illuminates red.

Illuminates briefly when the ignition is switched on.

Illuminates when the engine is running

If control indicator illuminates when the engine is running (together with control indicator STOP and a warning chime): Stop, switch off engine.

Caution

Engine lubrication may be interrupted. This may result in damage to the engine and/or locking of the drive wheels.

1. Depress clutch.
2. Select neutral gear (or move selector lever to **N**).
3. Move out of the flow of traffic as quickly as possible without impeding other vehicles.
4. Switch off ignition.

⚠ Warning

When the engine is off, considerably more force is needed to brake and steer.

Do not remove key until vehicle is stationary, otherwise the steering wheel lock could engage unexpectedly.

Check oil level before seeking assistance of a workshop ⇨ 149.

Fuel economy mode

ECO illuminates green when ECO mode is engaged to reduce fuel consumption.

ECO mode, driving economically ⇨ 116.

Low fuel

illuminates yellow.

Illuminates briefly when the ignition is switched on.

Illuminates when level in fuel tank is low (range of approx. 50 km); refuel immediately ⇨ 143.

Catalytic converter ⇨ 125.

Bleeding the diesel fuel system ⇨ 154.

Autostop

illuminates when engine is in an Autostop.

illuminates when an Autostop is inhibited when certain conditions are not fulfilled.

Stop-start system ⇨ 121.

Exterior light

D illuminates green.

Illuminated when the headlights are on.

illuminates green.

Illuminated when the sidelights are on.

Lighting ⇨ 98.

High beam

D illuminates blue.

Illuminated when high beam is on and during headlight flash ⇨ 99.

Fog light

illuminates green.

Illuminated when the front fog lights are on ⇨ 101.

Rear fog light

illuminates yellow.

Illuminated when the rear fog light is on ⇨ 101.

Cruise control

, illuminates green or yellow.

illuminates green when a certain speed is stored.

illuminates green when the system is on.

Speed limiter

illuminates yellow.

illuminates yellow when the system is on.

Cruise control and speed limiter ⇨ 135.

Tachograph

T illuminates when there is a fault ⇨ 97.

Door open

illuminates red.

Illuminates when a door is not fully closed.

A corresponding message also appears in the Driver Information Centre (DIC) ⇨ 92.

Information displays

Driver Information Centre

Depending on vehicle configuration, the following items appear in the display:

- outside temperature ⇨ 79
- clock ⇨ 79
- odometer ⇨ 82
- trip odometer ⇨ 82
- service display ⇨ 83
- vehicle messages ⇨ 93
- trip computer ⇨ 95

Info-display

The central display in the Infotainment system displays the time and Infotainment system information.

For further information, refer to the Infotainment system manual.

Vehicle messages

Messages are displayed in the Driver Information Centre (DIC) and may be accompanied by illumination of control indicator 🔧 or STOP in the instrument cluster.

Information messages

Information messages regarding, e.g. engine starting conditions, stop-start system, parking brake application, central locking, steering wheel lock etc. provide the current status of certain vehicle functions and instructions for use.

Fault messages

Fault messages regarding, e.g. fuel filter, airbags, exhaust emissions etc. are displayed together with control indicator 🔧. Drive with caution and seek the assistance of a workshop as soon as possible.

To remove fault messages, e.g. "**CHECK INJECTION**", from the display, press button on end of wiper lever. After a few seconds the message may disappear automatically and 🔧 remains illuminated. The fault will then be stored in the on board system.

Warning messages

Warning messages regarding, e.g. engine, battery or brake system failure, are displayed together with control indicator STOP and may be accompanied by a warning chime. Stop engine immediately and seek the assistance of a workshop.

Warning messages, e.g. "**BATTERY CHARGING FAULT**" disappear from the display automatically when the cause of the fault has been remedied.

Fuel economy messages

Fuel economy messages provide tips to improve fuel efficiency. Journeys can be saved in the system memory, enabling you to compare performances.

Refer to Infotainment system manual for further information.

Fuel economy rating ⇨ 95.

Warning chimes

Only one warning chime will sound at a time.

A corresponding message may also appear in the Driver Information Centre (DIC) when a warning chime is sounded.

When starting the engine or whilst driving:

- If seat belt is not fastened ⇨ 51.
- During operation of the turn and lane-change signals ⇨ 101.
- During illumination of certain control indicators.
- If the parking assist detects an object ⇨ 138.
- If the vehicle speed briefly exceeds a set limit ⇨ 135, ⇨ 138.
- If a door or the bonnet is not properly closed when vehicle exceeds a certain speed.
- If there is a fault in the brake system ⇨ 88.
- If the vehicle battery is not charging ⇨ 88.
- If engine lubrication is interrupted ⇨ 90.
- If AdBlue needs to be refilled or a fault is present ⇨ 125.
- If the electronic key is outside of the detection range.

  Electronic key system ⇨ 23, Power button ⇨ 118.

When the vehicle is parked and/or the driver's door is opened:

- If the key has been left in the ignition.
- If the electronic key has been left in the card reader.

  Electronic key system ⇨ 23, Power button ⇨ 118.
- If the vehicle is in an Autostop.

  Stop-start system ⇨ 121.
- If the exterior lights are on.

Engine oil level

If the minimum engine oil level is reached, a message is displayed in the Driver Information Centre (DIC) ⇨ 92 for 30 seconds after the engine is started.

Check oil level ⇨ 149.

Trip computer

The trip computer provides information on driving data, which is continually recorded and evaluated electronically.

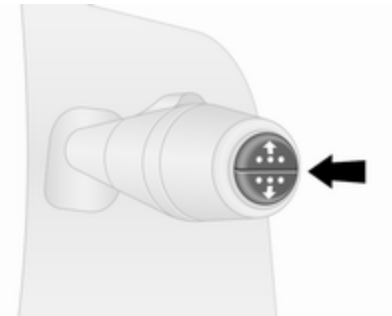

Depending on vehicle, the following functions can be selected by pressing button repeatedly on end of wiper lever:

- odometer ⇨ 82
- fuel used
- average consumption
- instantaneous consumption
- range
- trip odometer
- average speed
- distance before service ⇨ 83
- clock ⇨ 79, outside temperature ⇨ 79
- cruise control and speed limiter stored speed ⇨ 135
- fuel economy rating
- Adblue percentage remaining ⇨ 125
- fault and information messages

Fuel used

Displays the amount of fuel consumed since the last reset.

The measurement can be restarted at any time by pressing and holding the button.

Average consumption

The value is displayed after driving a distance of 400 metres.

Average consumption is displayed, taking into consideration the distance travelled and the fuel used since the last reset.

The measurement can be restarted at any time.

Instantaneous consumption

The value is displayed after reaching a speed of 30 km/h.

Range

The value is displayed after driving a distance of 400 metres.

The range is calculated from the current contents of the fuel tank and the average consumption since the last reset.

The range will not display if control indicator ⛽ is illuminated in the instrument cluster ⇨ 91.

Trip odometer

Displays the distance driven since the last reset.

The measurement can be restarted at any time.

Trip odometer ⇨ 82.

Average speed

The value is displayed after driving a distance of 400 metres.

The average speed since the last reset is displayed.

The measurement can be restarted at any time.

Interruptions in the journey with the ignition off are not included in the calculations.

Reset trip computer information

To reset the trip computer, select one of its functions then press and hold the button on the end of the wiper lever.

The following trip computer information will be reset:

- fuel used
- average consumption
- trip odometer
- average speed

The trip computer will reset automatically when the maximum value of any of the parameters is exceeded.

Fuel economy rating (ecoScoring)

If equipped, a rating of 0 to 100 is shown in the Info-Display to help evaluate fuel efficiency, based on your driving style.

Higher ratings indicate better fuel economy.

Tips to improve fuel economy are also given in the Info-Display. Journeys can be saved in the system memory, enabling you to compare performances. Refer to Infotainment system manual for further information.

Vehicle messages ⇨ 93.

Journey record

When the engine is switched off, a record of the last journey is shown in the Info-Display.

The following information is displayed:

- average fuel consumption
- total fuel consumption
- trip odometer
- fuel saved in km

Unit of measurement

To change the unit of measurement for the duration of a journey:

Vehicles with power button:
With ignition off, simultaneously press and hold button on end of wiper lever and press the power button ⇨ 118; the central display flashes for approx. 10 seconds until the new unit is displayed. Release button on end of wiper lever when the display stops flashing.

Vehicles without power button:
With ignition off, simultaneously press and hold button on end of wiper lever and switch on the ignition; the central display flashes for approx.
10 seconds until the new unit is displayed. Release button on end of wiper lever when the display stops flashing.

When the engine is switched off, the trip computer automatically returns to the original unit of measurement.

Interruption of power supply

If the power supply has been interrupted or if the vehicle battery voltage has dropped too low, the values stored in the trip computer will be lost.

Tachograph

The tachograph is operated as described in the operating instructions supplied. Observe regulations regarding use.

Note
When a tachograph is fitted, the total distance travelled may be shown only on the tachograph and not in the odometer within the instrument display.

Odometer ⇨ 82.

Control indicator T ⇨ 92 illuminates in the instrument cluster in the event of a fault. Seek the assistance of a workshop.

Lighting

Exterior lighting **98**
Light switch 98
Automatic light control 99
High beam 99
Headlight flash 99
Headlight range adjustment 99
Headlights when driving abroad 100
Daytime running lights 100
Adaptive forward lighting 100
Hazard warning flashers 100
Turn and lane-change signals . 101
Front fog lights 101
Rear fog lights 101
Reversing lights 101
Misted light covers 101
Interior lighting **102**
Instrument panel illumination control 102
Interior lights 102
Load compartment lighting 103
Glove box lighting 103
Lighting features **103**
Entry lighting 103
Exit lighting 104
Battery discharge protection 104

Exterior lighting

Light switch

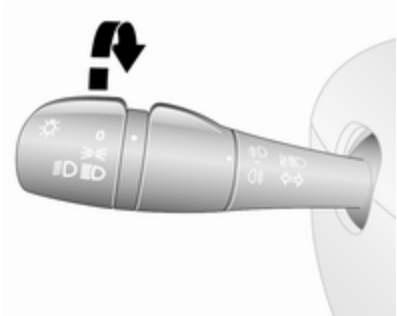

Turn outer switch:

O : off
: sidelights
: headlights

High beam control indicator ⇨ 91.

Low beam control indicator ⇨ 91.

Automatic light control

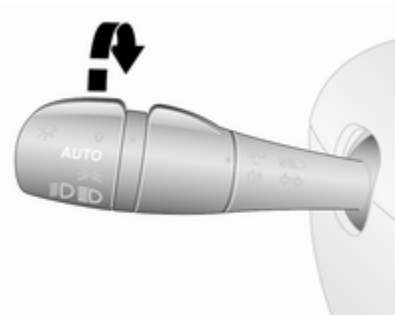

AUTO : automatic light control

When the automatic light control function is activated and the engine is running, the system switches between daytime running lights and headlights depending on the external lighting conditions.

For reasons of safety, it is advisable to have the automatic light control function activated.

Automatic headlight activation

During poor lighting conditions the headlights are switched on.

Daytime running lights ⇨ 100.

High beam

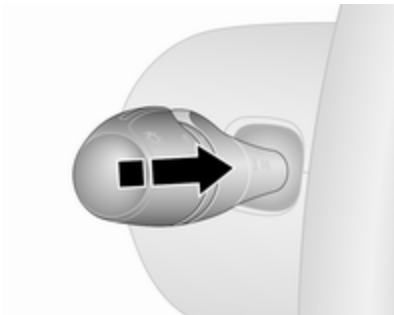

To switch from low to high beam, push lever.

To switch back to low beam, push lever again or pull.

Headlight flash

To activate the headlight flash, pull lever.

Headlight range adjustment

Manual headlight range adjustment

Adapt headlight range to the vehicle load to prevent dazzling of oncoming traffic.

Turn thumb wheel to required position:

0 : No load
4 : Loaded up to permissible maximum weight

Headlights when driving abroad

The asymmetrical headlight beam extends visibility at the edge of the road at the passenger side.

However, when driving in countries where traffic drives on the opposite side of the road, adjust the headlights to prevent dazzling of oncoming traffic.

Adjustment

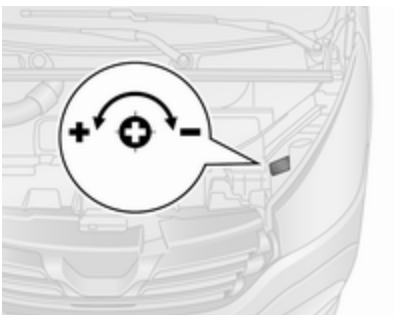

Open the bonnet ⇨ 148 and identify the marking (shown in the illustration) beside each of the headlights.

For each headlight:

Using a screwdriver, turn the screw by a $^1/_4$ turn towards the − symbol to lower the beams or towards the + symbol to raise the beams.

Ensure the headlight beams are returned to their original positions when required.

Daytime running lights

Daytime running lights increase visibility of the vehicle during daylight. They are switched on automatically when the ignition is switched on.

If required, the daytime running lights can be deactivated via the Infotainment system. For further information, refer to Infotainment system manual.

Automatic light control ⇨ 99.

Adaptive forward lighting

Cornering light

With the low beam switched on, depending on the steering angle, vehicle speed and gear selected when cornering, the front fog light will also switch on, to illuminate the corner of the road on the respective side.

Hazard warning flashers

Operated with the ⚠ button.

In the event of hard braking, the hazard warning flashers may turn on automatically. Switch off by pressing the ⚠ button.

Turn and lane-change signals

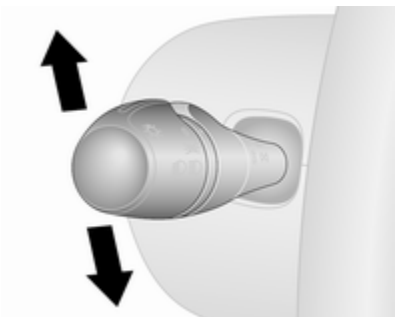

lever up : right turn signal
lever down : left turn signal

Turn and lane-change signals are operational when engine is running and during an Autostop.

When the steering wheel is turned back, the lever automatically returns to its original position and the turn signal is deactivated. This will not happen when making a minor steering manoeuvre such as lane changing.

For three flashes, e.g. when changing lanes, move lever part way to first stop and then release.

If the lever is moved past the first stop, the turn signal is switched on constantly. Switch the turn signal off manually by moving the lever to its original position.

Front fog lights

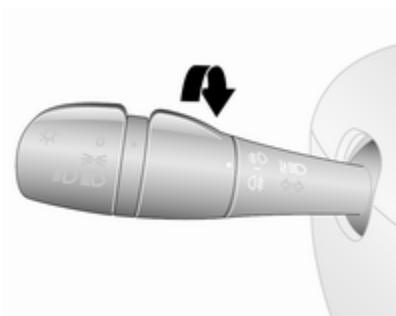

Turn inner switch to position ≠D.

Front fog lights will only operate when the ignition and headlights are switched on.

Rear fog lights

Turn inner switch to position ◐≠.

Rear fog light comes on together with front fog lights and will only operate when the ignition and headlights are switched on.

Reversing lights

The reversing lights come on when the ignition is on and reverse gear is selected.

Misted light covers

The inside of the light covers may mist up briefly in poor, wet and cold weather conditions, in heavy rain or after washing. The mist disappears quickly by itself; to help, switch on the headlights.

Interior lighting

Instrument panel illumination control

Brightness of the following lights can be adjusted when the exterior lights are on:

- instrument panel illumination
- info-display
- illuminated switches and operation elements.

Turn thumb wheel until the desired brightness is obtained.

Interior lights

Courtesy lights

During entry and exit of the vehicle, depending on switch position the front and rear courtesy lights automatically switch on, together with the foot well lights, then switch off after a delay.

Front courtesy lights

Operate rocker switch:

press **O**	:	off
centre position	:	automatic switching on and off
press	:	on

With the rocker switch in its central position, the light functions as a courtesy light and illuminates when the front doors are opened.

When the front doors are closed, the courtesy light extinguishes after a delay.

Rear courtesy lights

The upper load compartment lights can be set to illuminate when the side or rear doors are opened, or switched on constantly.

Operate rocker switch:

press **O**	:	off
centre position	:	automatic switching on and off
press ☼	:	on

With the rocker switch in its central position, the light functions as a courtesy light and illuminates when the side or rear doors are opened.

When the doors are closed, the courtesy light extinguishes after a delay.

LED spotlights

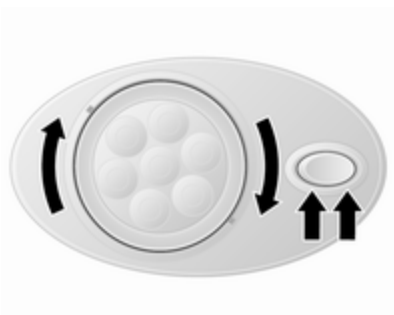

Depending on vehicle, adjustable LED spotlights, also including rocker switch, may be present.

Bench seat lights

Depending on vehicle, bench seat light illuminates when the sliding side door is opened.

Load compartment lighting

The lower load compartment lights come on when the load compartment is opened.

Glove box lighting

The glovebox light comes on when the glovebox is opened.

Lighting features

Entry lighting

Welcome lighting

Vehicle lights are switched on for a short time to facilitate locating the vehicle when it is dark.

Remote control operation

Lights switch on when unlocking the vehicle with the remote control.

Electronic key system operation

Press ☼. Press again to switch off.

Exit lighting

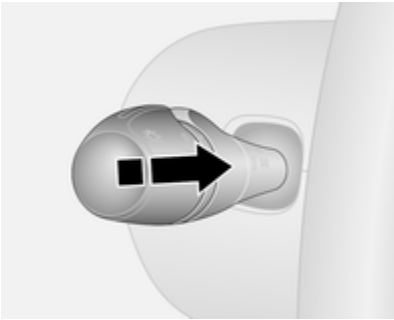

If equipped, headlights come on for approx. 30 seconds after the vehicle is parked and the system is activated.

Activating

1. Switch off ignition.
2. Remove ignition key.
3. Open driver's door.
4. Pull turn signal lever towards steering wheel.

This action can be repeated up to four times to a maximum period of 2 minutes.

The lighting is turned off immediately by switching on the ignition or turning the light switch.

Battery discharge protection

To prevent discharge of the vehicle battery when the ignition is switched off, some interior lights may be switched off automatically after some time.

Climate control

Climate control systems **105**
Heating and ventilation system 105
Air conditioning system 106
Electronic climate control system 107
Rear heating system 109
Rear air conditioning system ... 109
Auxiliary heater 110
Air vents **114**
Adjustable air vents 114
Fixed air vents 114
Glovebox cooler 114
Maintenance **115**
Air intake 115
Pollen filter 115
Air conditioning regular operation 115
Service 115

Climate control systems

Heating and ventilation system

Controls for:

- temperature
- fan speed
- air distribution

Heated rear window ⇨ 43.

Temperature

red : warm
blue : cold

Heating will not be fully effective until the engine has reached normal operating temperature.

Fan speed

Adjust the air flow by switching the fan to the desired speed.

Air distribution

: to head area
: to head area and foot well
: to foot well
: to windscreen, front door windows and foot well
: to windscreen and front door windows

Intermediate settings are possible.

Demisting and defrosting the windows

- Set temperature control to warmest level.
- Set fan speed to highest level.
- Set air distribution control to .
- Switch on heated rear window .

- Open side air vents as required and direct them towards door windows.
- For simultaneous warming of the foot well, set air distribution control to .

Heated rear window ⇨ 43.

Air conditioning system

In addition to the heating and ventilation system, the air conditioning system has controls for:

A/C : cooling
 : air recirculation

Heated seats ⇨ 48.

Cooling (A/C)

Press A/C to switch on cooling. Activation is indicated by illumination of the LED in the button. Cooling is only functional when the engine is running and climate control fan is switched on.

Press A/C again to switch off cooling.

The air conditioning system cools and dehumidifies (dries) the air when outside temperature is above a specific level. Therefore condensation may form and drip from under the vehicle.

If no cooling or drying is required, switch off the cooling system for fuel saving reasons. Activated cooling may inhibit an Autostop.

Stop-start system ⇨ 121.

Note
Air conditioning performance is reduced when ECO mode has been activated ⇨ 116.

Air recirculation system

Press to activate air recirculation mode. Activation is indicated by illumination of the LED in the button.

Press again to deactivate air recirculation mode.

⚠Warning

The exchange of fresh air is reduced in air recirculation mode. In operation without cooling, the air humidity increases, so the windows may mist up from inside. The quality of the passenger compartment air deteriorates, which may cause the vehicle occupants to feel drowsy.

In warm and very humid ambient air conditions, the windscreen might mist up from outside when cold air is directed towards it. If windscreen mists up from outside, activate windscreen wiper and avoid the use of air distribution settings and .

Maximum cooling

Briefly open the windows so that hot air can disperse quickly.

- Cooling A/C on.
- Air recirculation system on.
- Set air distribution control to .

- Set temperature control to coldest level.
- Set fan speed to highest level.
- Open all air vents.

Demisting and defrosting the windows

- Set temperature control to warmest level.
- Set fan speed to highest level.
- Set air distribution control to .
- Switch cooling **A/C** on.
- Switch on heated rear window .
- Open side air vents as required and direct them towards door windows.
- For simultaneous warming of the foot well, set air distribution control to .

Heated rear window ⇨ 43.

Electronic climate control system

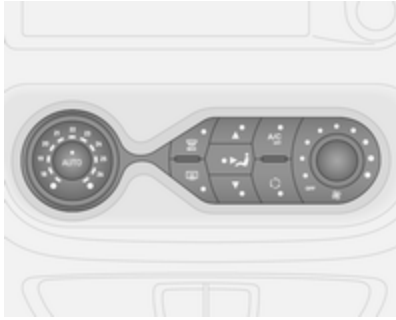

Controls for:

- air distribution
- temperature
- fan speed

AUTO	:	automatic mode
MAX	:	demisting and defrosting
	:	heated rear window
A/C OFF	:	switch off air conditioning
	:	manual air recirculation

Heated rear window ⇨ 43, Heated seats ⇨ 48.

The preselected temperature is automatically regulated. In Automatic mode, the fan speed and air distribution automatically regulate the air flow.

The system can be manually adapted via the use of air distribution and air flow controls.

Electronic climate control system is only fully operational when the engine is running.

Automatic mode AUTO

Basic setting for maximum comfort:

- Switch on the fan.
- Press **AUTO**; fan speed, air distribution, cooling and air recirculation are regulated automatically.
- Set the desired temperature.
- Open all air vents.

To switch off the electronic climate control system, switch off the fan.

Temperature preselection

Temperatures can be set to the desired value.

If the minimum temperature is set, the climate control system runs at maximum cooling.

If the maximum temperature is set, the climate control system runs at maximum heating.

Demisting and defrosting the windows

- Press MAX; LED illuminates in the button when activated.
- Temperature, air distribution and cooling are regulated automatically and the fan runs at high speed.
- Switch on heated rear window ⇨ 43.

To return to Automatic mode: press MAX or **AUTO**.

Note
If MAX is pressed while the engine is running, an Autostop will be inhibited until MAX is pressed again.

If MAX is pressed while the engine is in an Autostop, the engine will restart automatically.

Stop-start system ⇨ 121.

Manual settings

Manually changing any of the following settings will deactivate Automatic mode:

Fan speed ⌘

Adjust the air flow manually by switching the fan to the desired speed.

If the fan is switched off, the air conditioning is also deactivated.

Air distribution

Press appropriate button for desired adjustment. LED illuminates in the button when activated.

▲ : to windscreen and front door windows
: to head area
▼ : to foot well

Combinations of settings are possible by pressing two buttons until both LEDs are illuminated.

To return to Automatic mode: Press **AUTO** button.

Cooling A/C

The air conditioning system cools and dehumidifies (dries) the air when outside temperature is above a specific level. Therefore condensation may form and drip from under the vehicle.

Note
Air conditioning performance is reduced when ECO mode has been activated ⇨ 116.

If no cooling or drying is required press **A/C OFF** to switch the cooling system off, thus saving fuel. LED illuminates in the button.

To return to Automatic mode: Press **AUTO** button.

Air recirculation mode

Activate or deactivate manual air recirculation mode with . LED illuminates in the button when activated.

⚠ Warning

The exchange of fresh air is reduced in air recirculation mode. In operation without cooling the air humidity increases, so the windows may mist up from inside. The quality of the passenger compartment air deteriorates, which may cause the vehicle occupants to feel drowsy.

To return to Automatic mode: Press **AUTO** button.

Rear heating system

The rear passenger compartment heating fan assists air flow to the rear passenger compartment via the rear air vents.

The rate of air flow is determined by the fan. Air temperature is controlled using the temperature control on the instrument panel.

Rear air conditioning system

The rear air conditioning system is actuated in conjunction with the front passenger compartment air conditioning system.

Rear air conditioning fan switch

The rear air conditioning fan assists air flow to the rear passenger compartment via the rear air vents.

Switch on the fan while the air conditioning system is operating to allow cooled and dehumidified (dried) air to be distributed.

The rate of air flow is determined by the fan.

Auxiliary heater

Coolant heater

The Eberspächer engine-independent, fuel-powered coolant heater provides rapid heating of the engine coolant to enable heating of the vehicle interior without the engine running.

⚠ Warning

Do not operate the system when refuelling, when dust or combustible vapours are present or in enclosed spaces (e.g. garage).

Before starting or programming the system to start, turn the vehicle's climate control system to heat, set the air distribution to and turn the fan on.

Switch off when not required. Heating stops automatically after the programmed runtime. It will also cease to operate if the vehicle fuel level drops too low.

During operation, power from the vehicle battery is used. The driving time should therefore be at least as long as the heating time. For short journey times, check the vehicle battery regularly and recharge if necessary.

To ensure efficient performance, briefly operate the auxiliary heater once a month.

Control units

The timer or remote control unit turns the system on and off, and is used to programme specific departure times.

Timer

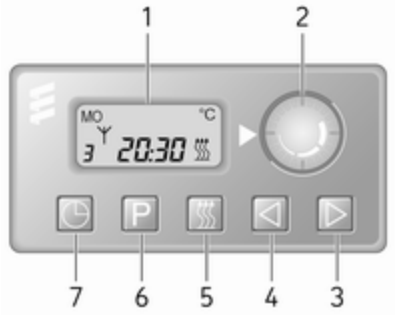

1 Display	:	Displays preset, weekday or preset day, current time or preset time, temperature, and
2 Temperature	:	Selects temperature
3 ►	:	Adjusts values up
4 ◄	:	Adjusts values down
5	:	Selects heat settings
6 P	:	Selects preset settings
7	:	Selects time and weekday settings

Remote control (Type A)

1 Display : Displays preset, current time or preset time, temperature, 🍸, 🔋, ♨, ⏲ and ✤

2 ▬ : Long press: switch heater on, short press: turns display on or confirms selection

3 ► : Adjusts values up

4 ▭ : Long press: switch heater off, short press: exit menu or turns display off

5 ◄ : Adjusts values down

If no buttons are pressed within 10 seconds the display automatically turns off.

Remote control (Type B)

1 Display : Displays preset, current time or preset time, temperature, 🍸, 🔋, ♨, ⏲ and ✤

2 ► : Adjusts values up

3 OFF : Switch heater off, or press ♨ and **OFF** simultaneously to confirm selection

4 ♨ : Switch heater on, or press ♨ and **OFF** simultaneously to confirm selection

5 ◄ : Adjusts values down

If no buttons are pressed within 30 seconds the display automatically turns off.

⚠Warning

When refuelling, switch off the remote control unit as well as the heater!

The remote control has a maximum range of 1000 metres. The range may be reduced due to environmental conditions and as the battery becomes weaker.

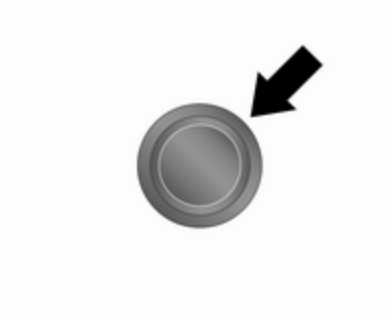

In addition to a remote control unit, the heating can also be switched on for 30 minutes, or off, using the button on the instrument panel.

Battery replacement

Replace the battery when the range of the remote control is reduced or when the battery charge symbol flashes.

Open the cover and replace the battery (Type A: CR 2430, Type B: 2CR 11108, or equivalent), ensuring the new battery is correctly installed with the positive (+) side facing the positive terminals. Replace the cover securely.

Dispose of old batteries in accordance with environmental regulations.

Batteries do not belong in household waste. They must be disposed of at an appropriate recycling collection point.

Remote control fault displays

	: poor signal – adjust position
	: no signal – move closer
	: battery low – change battery
	: system error – consult workshop
Add, AddE	: system in learning mode

Teach remote control

If the vehicle battery is reconnected, the LED in the instrument panel button illuminates and the system configures the remote control menu automatically. If the LED flashes, select **Add** or **AddE** and confirm.

Additional remote control units may also be configured. Press the button until LED flashes, switch on the remote control, select **Add** and confirm.

AddE teaches the current remote control unit exclusively and blocks all previously configured units. **Add** teaches up to 4 remote control units, but only one unit can operate the system at any one time.

Operation

Heating

Press , the predetermined heating duration, e.g. **30** is displayed.

To temporarily adjust the heating duration, adjust with ◄ or ►. The value can be set from 10 to 120 minutes. Due to the power consumption, note the heating duration.

To switch off, press .

To change the default predetermined heating duration, ensure the heater is switched off, press and hold ◄ until the display flashes and adjust with ◄ or ►.

Programming P

Up to 3 preset departure times during one day, or one preset departure time over one week can be programmed.

- Press **P** once to select preset memory number **1**.
- Press **P** twice to select preset memory number **2**.
- Press **P** three times to select preset memory number **3**.
- Press **P** again to exit the preset memory.

Start heating within 24 hours

- Press **P** to select desired preset memory number **1**, **2** or **3**.
- Briefly press ◄ or ►; the preset time flashes.
- Adjust the preset time with ◄ or ►.
- Press **P** to confirm and exit the preset memory.

Start heating up to 7 days

- Press **P** to select desired preset memory number **1**, **2** or **3**.
- Briefly press ◄ or ►; the preset time flashes.
- Adjust the preset time with ◄ or ►.
- After 5 seconds the preset day flashes.
- Adjust the preset day with ◄ or ►.
- The preset time and day are set once the display changes to the current time.

Set time and weekday ◷

If the vehicle battery is disconnected or its voltage is too low, the unit will need to be reset.

- Press ◷ until the time flashes.
- Press ◄ or ► to change the current time.
- Time is stored when the display stops flashing.
- Wait for weekday to flash.
- Press ◄ or ► to change the weekday.
- Weekday is stored when the display stops flashing.

Heating level

The preferred heating level for programmed departure times can be set between 10 to 30°C.

Adjust using the temperature preselection dial.

Air vents

Adjustable air vents

At least one air vent must be open while cooling is on, in order to prevent the evaporator from icing up due to lack of air movement.

⚠Warning

Do not attach any objects to the slats of the air vents. Risk of damage and injury in case of an accident.

Centre air vents

To open or close the centre air vents and direct the flow of air, tilt the slats up or down and turn the adjuster wheel left or right.

Side air vents

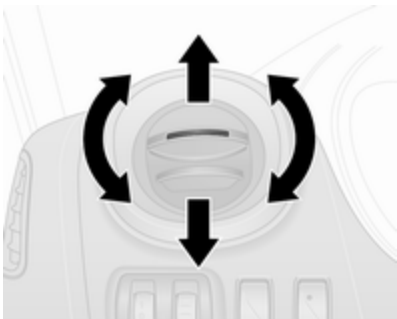

To open or close the side air vents, tilt the slats up or down.

Direct the flow of air by rotating the vents.

Depending upon the position of the temperature control, air will be directed into the vehicle via the side air vents.

Rear air vents

Depending on vehicle, additional adjustable air vents are located in the rear passenger compartment.

Fixed air vents

Additional air vents are located beneath the windscreen and door windows, in the foot wells and, depending on vehicle, in the rear passenger compartment.

Glovebox cooler

The air conditioning system can also keep the contents of the glovebox cool.

Maintenance

Air intake

The air intake in front of the windscreen in the engine compartment must be kept clear to allow air intake. Remove any leaves, dirt or snow.

Pollen filter

The pollen filter cleans dust, soot, pollen and spores from the air entering the vehicle through the air intake.

Note
Pollen filter is only fitted to vehicles with air conditioning system.

Air conditioning regular operation

In order to ensure continuously efficient performance, cooling must be operated for a few minutes once a month, irrespective of the weather and time of year. Operation with cooling is not possible when outside temperature is too low.

Service

For optimal cooling performance, it is recommended that the climate control system be checked annually, starting three years after initial vehicle registration, including:

- functionality and pressure test
- heating functionality
- leakage check
- check of drive belts
- cleaning of condenser and evaporator drainage
- performance check

Driving and operating

Driving hints **116**
Driving economically 116
Control of the vehicle 117
Steering 117
Starting and operating **118**
New vehicle running-in 118
Ignition switch positions 118
Power button 118
Starting the engine 120
Idle speed control 120
Vehicle shutdown 121
Overrun cut-off 121
Stop-start system 121
Parking 124
Engine exhaust **124**
Diesel particle filter 124
Catalytic converter 125
AdBlue 125
Manual transmission **130**
Brakes **130**
Antilock brake system 131
Parking brake 131
Brake assist 132
Hill start assist 132
Ride control systems **132**
Traction Control system 132
Electronic stability program 133
Driver assistance systems **135**
Cruise control 135
Speed limiter 138
Parking assist 138
Rear view camera 141
Fuel **142**
Fuel for diesel engines 142
Refuelling 143
Fuel consumption - CO_2-Emissions 144
Trailer hitch **144**
General information 144
Driving characteristics and towing tips 144
Trailer towing 145
Trailer stability assist 145

Driving hints

Driving economically

ECO mode

ECO mode is a function that optimises fuel consumption. It affects engine power and torque, acceleration, gear shift indication, heating, air conditioning and electrical consumers.

Activation

Press **ECO**. Control indicator **ECO** illuminates in the instrument cluster when activated.

During driving, it is possible to temporarily disable ECO mode, e.g. to increase engine performance, by depressing the accelerator pedal firmly.

ECO mode is reactivated when pressure is reduced on the accelerator pedal.

Deactivation

Press **ECO** again. Control indicator **ECO** extinguishes in the instrument cluster.

Control of the vehicle

Never coast with engine not running

Many systems will not function in this situation (e.g. brake servo unit, power steering). Driving in this manner is a danger to yourself and others.

All systems function during an Autostop, but there may be a controlled reduction in power steering assist and vehicle speed is reduced.

Stop-start system ⇨ 121.

Pedals

To ensure the pedal travel is uninhibited, there must be no mats in the area of the pedals.

Steering

If power steering assist is lost because the engine stops or due to a system malfunction, the vehicle can be steered but may require increased effort.

Caution

Vehicles equipped with hydraulic power steering:

If the steering wheel is turned until it reaches the end of its travel, and is held in that position for more than 15 seconds, damage may occur to the power steering system and there may be loss of power steering assist.

Starting and operating

New vehicle running-in

Do not brake unnecessarily hard for the first few journeys and after new disc brake pads have been fitted.

During the first drive, smoke may occur because of wax and oil evaporating off the exhaust system. Park the vehicle in the open for a while after the first drive and avoid inhaling the fumes.

During the running-in period, fuel and engine oil consumption may be higher and the cleaning process of the diesel particle filter may take place more often. Autostop may be inhibited to allow for charging the vehicle battery.

Stop-start system ⇨ 121.

Diesel particle filter ⇨ 124.

Ignition switch positions

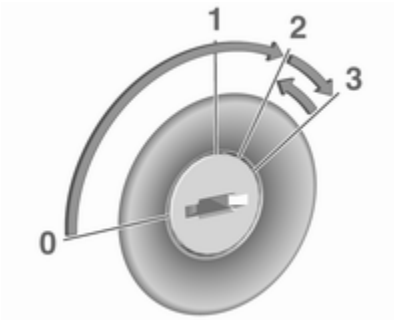

0 : Ignition off
1 : Steering wheel lock released, ignition off
2 : Ignition on
Diesel engines: preheating
3 : Starting

Power button

Electronic key must be inside the vehicle, either in the card reader or the front passenger compartment.

If the electronic key is not inside the vehicle, a corresponding message appears in the Driver Information Centre (DIC) ⇨ 92.

Note
Do not put the electronic key in the load compartment during driving, as this is outside of the detection zone (indicated by a warning chime at low speed ⇨ 94 and a message in the Driver Information Centre (DIC) ⇨ 93).

Some functions, e.g. Infotainment system, are available for use as soon as you enter the vehicle.

Accessory power mode

Press **START/STOP** without operating clutch or brake pedal to enable further electrical functions to be operated.

Engine start

Operate clutch and brake pedal and press **START/STOP**. Release button after starting procedure begins.

If a gear is engaged, the engine can be started only by operating the clutch pedal and pressing the **START/STOP** button.

In some cases, it may be necessary to move the steering wheel slightly while pressing **START/STOP** to release the steering wheel lock. A corresponding message appears in the DIC ⇨ 92.

At very low outside temperatures (e.g. below -10 °C) keep the clutch pedal depressed while pressing **START/STOP** until the engine starts.

If one of the starting conditions is not applied, a corresponding message appears in the DIC ⇨ 92.

Vehicle messages ⇨ 93.

Engine stop

Electronic key must be inside the vehicle, either in the card reader or the front passenger compartment.

With the vehicle stationary, press **START/STOP** to stop the engine. The steering wheel lock is engaged when the driver's door is opened and the vehicle is locked.

If the electronic key is not detected, a corresponding message appears in the DIC ⇨ 92. In this event, press **START/STOP** for 2 seconds to stop the engine.

Central locking system ⇨ 25.

Retained power off

Press **START/STOP** for more than two seconds; the engine is stopped while some functions, e.g. Infotainment system, are available for use for approx. 10 minutes.

These functions stop working when the driver's door is opened and the vehicle is locked.

Note
Always take the electronic key with you when exiting the vehicle.

The electronic key being left in the card reader is indicated by a warning chime ⇨ 94 and a message in the Driver Information Centre (DIC) ⇨ 93 when the driver's door is opened.

⚠ Danger

Never leave an electronic key inside the vehicle when children or animals are left in the vehicle, to avoid unintended operation of windows, doors or engine. Risk of fatal injury.

Fault

If the engine cannot be started, the cause may be one of the following:

- Fault in electronic key.
- Electronic key out of reception range.

- Battery voltage too low.
- Overload of the central locking system by operating at frequent intervals, the power supply is interrupted for a short time.
- Interference from higher-power radio waves from other sources.

Battery replacement ⇨ 22.

Central locking system ⇨ 25.

Electronic key system ⇨ 23.

Starting the engine

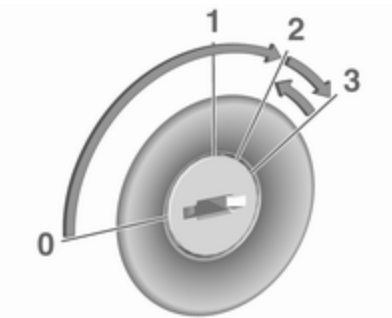

Manual transmission: operate clutch.

Do not accelerate.

Diesel engines: turn the key to position **2** for preheating until control indicator extinguishes in the instrument cluster ⇨ 90.

Turn key to position **3** and release.

The increased engine speed automatically returns to normal idling speed as the engine temperature rises.

Start attempts should not last longer than 15 seconds. If engine does not start, wait 15 seconds before repeating starting procedure. If necessary, depress accelerator before repeating starting procedure.

Before restarting or to switch off the engine, turn key back to **0**.

During an Autostop, the engine can be started by depressing the clutch pedal. Stop-start system ⇨ 121.

Turbo engine warm-up

Upon start-up, engine available torque may be limited for a short time, especially when the engine temperature is cold. The limitation is to allow the lubrication system to fully protect the engine.

Idle speed control

To increase the idle speed, press the switch. After a few seconds the function will be activated.

The function will be deactivated when:

- The clutch pedal is depressed.
- The accelerator pedal is depressed.
- Vehicle speed is above 0 km/h.
- Control indicator , or STOP illuminate in the instrument cluster.

To increase or decrease the fast idle speed rate, consult a workshop.

Note
When the fast idle function is activated, the stop-start system is automatically deactivated.

Stop-start system ⇨ 121.

Vehicle shutdown

Fuel cut-off system

If the vehicle runs out of fuel, the fuel system is cut-off and must be reset after refuelling. A corresponding warning message may also appear in the Driver Information Centre (DIC) ⇨ 92.

⚠ Danger

If you can smell fuel in the vehicle, or a fuel leak is present, have the cause of this remedied immediately by a workshop. Do not reset the fuel cut-off system, to avoid the risk of fire.

Resetting with remote control key / manual key

To reset the fuel cut-off system and enable the vehicle to be driven:

1. Turn the ignition key to position **2** ⇨ 118.
2. Wait a few minutes to allow the fuel system to be reset.
3. Turn key to position **3** to start the engine.

If the engine does not start, repeat the procedure.

Resetting with electronic key system

To reset the fuel cut-off system and enable the vehicle to be driven:

1. Insert the electronic key in the card reader ⇨ 118.
2. Press **START/STOP** without depressing any pedals.
3. Wait a few minutes to allow the fuel system to be reset.

If the engine does not start, repeat the procedure.

Electronic key system ⇨ 23.

Power button ⇨ 118.

Refuelling ⇨ 143.

Overrun cut-off

The fuel supply is automatically cut off during overrun, i.e. when the vehicle is driven with a gear engaged but accelerator is released.

Stop-start system

The stop-start system helps to save fuel and to reduce the exhaust emissions. When conditions allow, it switches off the engine as soon as the vehicle is at a low speed or at a standstill, e.g. at a traffic light or in a traffic jam. It restarts the engine automatically as soon as the clutch pedal is depressed.

A vehicle battery sensor ensures that an Autostop is only performed if the vehicle battery is sufficiently charged for a restart.

Activation

The stop-start system is available as soon as the engine is started, the vehicle starts-off and the conditions as stated below in this section are fulfilled.

If the below conditions are not fulfilled, an Autostop is prohibited and control indicator Ⓐ illuminates in the instrument cluster ⇨ 91.

Deactivation

Deactivate the stop-start system manually by pressing Ⓐ. LED in the button illuminates to indicate deactivation and a corresponding message appears in the Driver Information Centre (DIC) ⇨ 92.

If deactivated manually, it is possible to reactivate the stop-start system by pressing Ⓐ again.

Vehicle messages ⇨ 93.

Note
When the fast idle function is activated, the stop-start system is automatically deactivated and cannot be reactivated by pressing Ⓐ. LED in button illuminates to indicate deactivation and a corresponding message may appear in the Driver Information Centre (DIC) ⇨ 92.

Idle speed control ⇨ 120.

Autostop

If the vehicle is at a low speed or at a standstill, activate an Autostop as follows:

- depress the clutch pedal
- move the selector lever to neutral
- release the clutch pedal

The engine will be switched off while the ignition stays on.

An Autostop is indicated when Ⓐ illuminates in the instrument cluster ⇨ 91.

During an Autostop, heating and brake performance will be maintained. However, brake assist is not available ⇨ 132.

Caution
The steering assist may be reduced during an Autostop.

Conditions for an Autostop

The stop-start system checks if each of the following conditions is fulfilled:

- the stop-start system is not manually deactivated
- the bonnet is fully closed
- the vehicle battery is sufficiently charged and in good condition
- the engine is warmed-up
- the engine coolant temperature is not too high
- the outside temperature is not too low or too high (e.g. below 0 °C or above 35 °C)
- the brake vacuum is sufficient
- the defrosting function is not activated ⇨ 107
- the self-cleaning function of the diesel particle filter is not active ⇨ 124
- the Antilock brake system (ABS) ⇨ 131, Traction Control system (TC) ⇨ 132 and Electronic Stability Program (ESP®Plus) ⇨ 133 ride control systems are not actively engaged
- the vehicle has moved since the last Autostop

Otherwise an Autostop will be inhibited.

Certain settings of the climate control system may inhibit an Autostop. See "**Climate control**" chapter for further information ⇨ 107

Restart of the engine by the driver

Depress the clutch pedal to restart the engine.

Note
If any gear is selected, the clutch pedal must be fully depressed to restart the engine.

Control indicator Ⓐ ⇨ 91 extinguishes in the instrument cluster when the engine is restarted.

Restart of the engine by the stop-start system

The selector lever must be in neutral to enable an automatic restart.

If one of the following conditions occurs during an Autostop, the engine will be restarted automatically by the stop-start system:

- the stop-start system is manually deactivated
- the bonnet is opened
- the vehicle battery is discharged
- the engine temperature is too low
- the brake vacuum is not sufficient
- the vehicle starts to move
- the defrosting function is activated ⇨ 107

If an electrical accessory, e.g. a portable CD player, is connected to the power outlet, a brief power drop during engine restart may be noticeable.

Fault

If a fault occurs in the stop-start system, the LED in illuminates, and a corresponding message appears in the DIC ⇨ 92. Seek the assistance of a workshop.

Vehicle messages ⇨ 93.

Warning chimes ⇨ 94.

Parking

⚠ Warning

- Do not park the vehicle on an easily ignitable surface. The high temperature of the exhaust system could ignite the surface.
- Always apply parking brake without pressing release button. Apply as firmly as possible on a downhill slope or uphill slope. Depress foot brake at the same time to reduce operating force.
- Switch off the engine.
- If the vehicle is on a level surface or uphill slope, engage first gear. On an uphill slope, turn the front wheels away from the kerb.

  If the vehicle is on a downhill slope, engage reverse gear. Turn the front wheels towards the kerb.

- Lock the vehicle ⇨ 25
- Activate the anti-theft locking system ⇨ 35 and anti-theft alarm system ⇨ 36.

Engine exhaust

⚠ Danger

Engine exhaust gases contain poisonous carbon monoxide, which is colourless and odourless and could be fatal if inhaled.

If exhaust gases enter the interior of the vehicle, open the windows. Have the cause of the fault rectified by a workshop.

Avoid driving with an open load compartment, otherwise exhaust gases could enter the vehicle.

Diesel particle filter

The diesel particle filter system filters harmful soot particles out of the exhaust gases. The system includes a self-cleaning function that runs automatically during driving without any notification.

The filter is cleaned by periodically burning off the soot particles at high temperature. This process takes place automatically under set driving

conditions. Autostop is not available and fuel consumption may be higher during this period. The emission of smells and smoke during this process is normal.

Under certain driving conditions, e.g. short distances, the system cannot clean itself automatically.

If cleaning of the filter is required and if previous driving conditions did not enable automatic cleaning, it will be indicated by the illumination of control indicators 🔧 ⇨ 88 and ⇨ 88 in the instrument cluster. Seek the assistance of a workshop immediately.

Caution
If the cleaning process is interrupted, there is a risk of provoking severe engine damage.

Cleaning takes place quickest at high engine speeds and loads.

Catalytic converter

The catalytic converter reduces the amount of harmful substances in the exhaust gases.

Caution
Fuel grades other than those listed on page ⇨ 142, ⇨ 190 could damage the catalytic converter or electronic components. Unburnt fuel will overheat and damage the catalytic converter. Therefore avoid excessive use of the starter, running the fuel tank dry and starting the engine by pushing or towing.

In the event of misfiring, uneven engine running, a reduction in engine performance or other unusual problems, have the cause of the fault rectified by a workshop as soon as possible. In an emergency, driving can be continued for a short period, keeping vehicle speed and engine speed low.

If control indicator flashes, the permitted emission limits may be exceeded. Lift your foot off the accelerator until stops flashing and is steadily illuminated. Contact a workshop immediately.

Malfunction indicator light ⇨ 88.

AdBlue

General information

The selective catalytic reduction (BlueInjection) is a method to substantially reduce the nitrogen oxides in the exhaust emission. This is achieved by injecting a Diesel Exhaust Fluid (DEF) into the exhaust system.

The designation of this fluid is AdBlue ®. It is a non-toxic, non-flammable, colourless and odourless fluid which consists of 32% urea and 68% water.

Note
AdBlue ® is a registered trademark of the Verband der Automobilindustrie e.V. (VDA).

⚠Warning

Avoid contact of your eyes or skin with AdBlue.

In case of eye or skin contact, rinse off with water.

Caution

Avoid contact of the paintwork with AdBlue.

In case of contact, rinse off with water.

AdBlue freezes at a temperature of approx. -11 °C. As the vehicle is equipped with an AdBlue pre-heater, the emissions reduction at low temperatures is ensured. The AdBlue pre-heater works automatically.

Adblue percentage remaining

The current Adblue percentage remaining can be shown in the Driver Information Centre ⇨ 92.

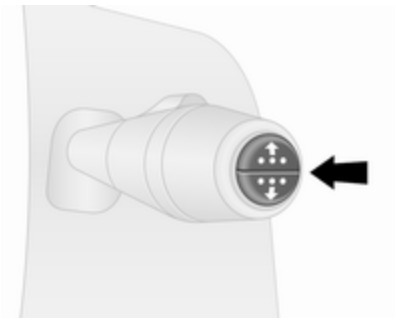

Press button on end of wiper lever repeatedly until the 'Adblue percentage remaining' menu is displayed.

Level warnings

The AdBlue consumption is approx. 0.7 litres per 1000 km and depends on the driving behaviour.

If the AdBlue level falls below a certain value, a level warning will be displayed in the Driver Information Centre ⇨ 92. Additionally, control indicator illuminates continuously together with a warning chime.

Refill the Adblue tank as soon as possible. Refer to "**Refilling AdBlue**" below.

Driving is possible without any restrictions.

If AdBlue is not refilled within a certain distance, further level warnings are displayed in the Driver Information Centre depending on the current AdBlue level.

Engine restarts prevented

Subsequent requests to refill AdBlue and finally the announcement that an engine restart will be prevented are displayed in the Driver Information Centre.

Note
These restrictions are a legal requirement.

Before the prevention of an engine restart, a warning message with 0 km is displayed in the Driver Information Centre, indicating that after switching off the ignition an engine restart will be prohibited.

After the prevention of an engine start, a warning message is displayed in the Driver Information Centre reminding the driver that AdBlue level is insufficient.

To allow the engine to be restarted, the tank should be filled with at least 10 litres of AdBlue.

High emission warnings

If the exhaust emission rises above a certain value, warnings similar to the range warnings as described above will be displayed in the Driver Information Centre. Control indicator illuminates continuously together with and a warning chime.

Requests to have the exhaust system checked and finally the announcement that an engine restart with be prevented are displayed in the Driver Information Centre.

Note
These restrictions are a legal requirement.

At an AdBlue range of 1100 km, a warning message is displayed in the Driver Information Centre showing the remaining distance the vehicle can travel before engine restarts are prevented. This warning message is repeated every 100 km.

Seek the assistance of a workshop as soon as possible.

Refilling AdBlue

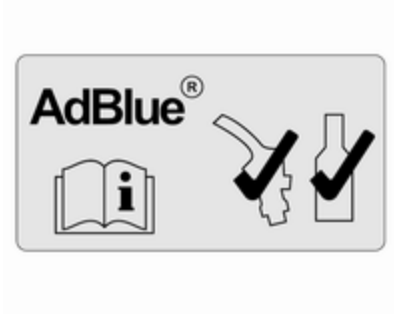

Caution

Only use AdBlue that complies with European standards DIN 70 070 and ISO 22241-1.

Do not use additives.

Do not dilute AdBlue.

Otherwise the selective catalytic reduction system could be damaged.

Note
If AdBlue must be refilled at very low temperatures, the refilling of AdBlue may not be detected by the system. In this case, park the vehicle in a space with a higher ambient temperature until AdBlue is liquefied.

Note
If engine starting is prohibited due to low Adblue level, we recommend adding a volume of at least 10 litres of AdBlue when refilling. Avoid minor top-ups (e.g. less than 5 litres), otherwise the system may not detect a refill.

Note
When unscrewing the protective cap from the filler neck, ammonia fumes may emerge. Do not inhale as the fumes have a pungent smell. The fumes are not harmful by inhalation.

The vehicle must be parked on a level surface.

The filler neck for AdBlue is located behind the fuel filler flap, located on the left-hand side of the vehicle.

The fuel filler flap can only be opened if the vehicle is unlocked and the left-hand door is opened.

⚠ Danger

Vehicles with stop-start system: The engine must be switched off and the ignition key removed, to avoid risk of engine being restarted automatically by the system.

Capacities ⇨ 200.

Filling station

⚠ Danger

Follow the operating and safety instructions of the filling station when refilling Adblue.

1. Switch off engine and remove key from ignition switch.
2. Pull fuel filler flap to open.

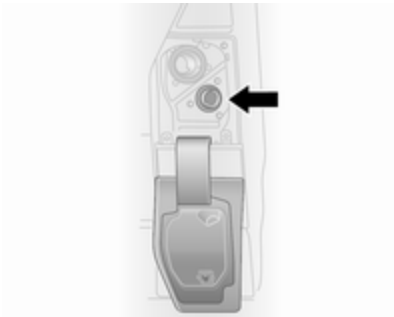

3. Unscrew protective cap anticlockwise from the filler neck.
4. Fully insert the pump nozzle into the filler neck and switch it on.
5. When refilling is complete, mount the protective cap and turn clockwise until it engages.
6. Close fuel filler flap and left-hand door.

AdBlue canister

Note
Only use the designated AdBlue canisters for refilling, to prevent a topping-up of too much AdBlue. Additionally, the fumes in the tank are captured in the canister and do not emerge.

Note
Since AdBlue has a limited durability, check the date of expiry before refilling.

1. Switch off engine and remove key from ignition switch.
2. Pull fuel filler flap to open.

3. Unscrew protective cap anticlockwise from the filler neck.
4. Open AdBlue canister.
5. Mount one end of the hose on the canister and screw the other end on the filler neck.
6. Lift the canister until it is empty.
7. Unscrew the hose from the filler neck.
8. Mount the protective cap and turn clockwise until it engages.
9. Close fuel filler flap and left-hand door.

Note
Dispose of AdBlue canister and hose according to environmental requirements.

Note
Let the vehicle idle for 10 seconds to allow the system to detect the AdBlue refill.

Failure to observe this procedure will result in the system only recognising the AdBlue refill after 20 minutes of driving.

If the AdBlue refill is detected successfully, AdBlue level warnings will disappear.

If the AdBlue refill is not detected some time after running the engine, seek the assistance of a workshop.

Filler cap

Only use genuine filler caps. Adblue tank has a special filler cap.

Fault

If the system detects an operating fault, control indicator illuminates together with and a warning chime. Seek the assistance of a workshop immediately.

A corresponding message appears in the Driver Information Centre ⇨ 92.

Manual transmission

To engage reverse, with the vehicle stationary depress the clutch pedal, pull up the collar on the selector lever and engage the gear against the resistance.

If the gear does not engage, set the lever in neutral, release the clutch pedal and depress again; then repeat gear selection.

Do not slip the clutch unnecessarily.

When operating, depress the clutch pedal completely. Do not use the pedal as a foot rest.

Caution

It is inadvisable to drive with hand resting on the selector lever.

Brakes

The brake system comprises two independent brake circuits.

If a brake circuit fails, the vehicle can still be braked using the other brake circuit. However, braking effect is achieved only when you depress the brake pedal firmly. You need to use considerably more force for this. The braking distance is extended. Seek the assistance of a workshop before continuing your journey.

When the engine is not running, the support of the brake servo unit disappears once the brake pedal has been depressed once or twice. Braking effect is not reduced, but braking requires significantly greater force. It is especially important to bear this in mind when being towed.

If control indicator ⓘ illuminates in the instrument cluster while driving and a corresponding message appears in the Driver Information Centre (DIC) ⇨ 92, there is a fault in the braking system. Seek the assistance of a workshop immediately.

Control indicator ⓘ ⇨ 88.

Vehicle messages ⇨ 93.

Antilock brake system

Antilock brake system (ABS) prevents the wheels from locking.

ABS starts to regulate brake pressure as soon as a wheel shows a tendency to lock. The vehicle remains steerable, even during hard braking.

ABS control is made apparent through a pulse in the brake pedal and the noise of the regulation process.

For optimum braking, keep the brake pedal fully depressed throughout the braking process, despite the fact that the pedal is pulsating. Do not reduce the pressure on the pedal.

After starting-off, the system performs a self-test which may be audible.

Control indicator (ABS) ⇨ 89.

Fault

If control indicator (ABS) does not go out a few seconds after the ignition is switched on, or if it illuminates while driving, there is a fault in the ABS. Control indicator 🔧 ⇨ 88 may also illuminate in the instrument cluster together with a corresponding message in the Driver Information Centre (DIC). The brake system remains operational but without ABS regulation.

⚠ Warning

If there is a fault in the ABS, the wheels may be liable to lock due to braking that is heavier than normal. The advantages of ABS are no longer available. During hard braking, the vehicle can no longer be steered and may swerve.

If control indicators (ABS), 🔧, ⓘ ⇨ 88 and STOP ⇨ 88 illuminate, there is a fault in the braking system. A corresponding message also appears in the DIC ⇨ 92. Have the cause of the fault remedied by a workshop.

Vehicle messages ⇨ 93.

Parking brake

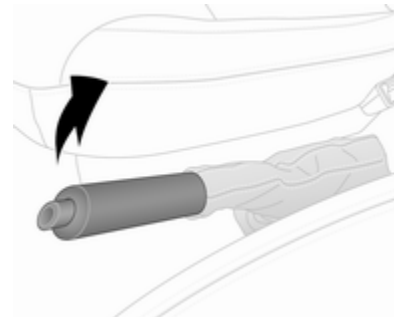

⚠ Warning

Always apply parking brake firmly without operating the release button, and apply as firmly as possible on a downhill or uphill slope.

To release the parking brake, pull the lever up slightly, press the release button and fully lower the lever.

To reduce the operating forces of the parking brake, depress the brake pedal at the same time.

Control indicator ⓘ ⇨ 88.

Parking ⇨ 124.

Brake assist

If the brake pedal is depressed quickly and forcefully, maximum brake force is automatically applied (full braking).

Maintain steady pressure on the brake pedal for as long as full braking is required. Maximum brake force is automatically reduced when the brake pedal is released.

Brake assist is not available during an Autostop.

Stop-start system ⇨ 121.

Hill start assist

The system helps prevent unintended movement when driving away on inclines.

When releasing the brake pedal after stopping on an incline (with the selector lever in a forward gear or reverse gear), the brakes remain on for a further 2 seconds. The brakes release automatically as soon as the vehicle begins to accelerate.

Caution
The Hill start assist cannot completely prevent vehicle movement in all situations (extremely steep gradients, etc.). If necessary, depress the brake pedal to prevent the vehicle from rolling forwards or backwards.

The Hill start assist is not active during an Autostop. Stop-start system ⇨ 121.

Ride control systems

Traction Control system

The Traction Control system (TC) is a component part of the Electronic Stability Program (ESP®Plus) which improves driving stability when necessary, regardless of the type of road surface or tyre grip, by preventing the drive wheels from spinning.

As soon as the drive wheels starts to spin, engine output is reduced and the wheel spinning the most is braked individually. This considerably improves the driving stability of the vehicle on slippery road surfaces.

TC is operational as soon as the ignition is switched on and control indicator extinguishes in the instrument cluster. A corresponding message also appears in the Driver Information Centre (DIC) ⇨ 92.

When TC is active flashes.

⚠ Warning

Do not let this special safety feature tempt you into taking risks when driving.

Adapt speed to the road conditions.

Control indicator ⇨ 89.

Trailer stability assist (TSA) ⇨ 145.

Enhanced Traction function

If necessary, in the event of soft ground, mud or snow-covered road surfaces, the Traction control system (TC) can be deactivated to enhance traction:

Press on the instrument panel.

Control indicator illuminates in the instrument cluster and a corresponding message appears in the DIC ⇨ 92.

When vehicle speed reaches 50 km/h, the system switches automatically from Enhanced Traction function to TC operation. Control indicator extinguishes in the instrument cluster.

TC is reactivated by pressing again. Control indicator extinguishes.

TC is also reactivated the next time the ignition is switched on.

Fault

If the system detects a fault, control indicator ⇨ 89 illuminates together with ⇨ 88 in the instrument cluster and a corresponding message appears in the DIC ⇨ 92.

TC is not operational. Have the cause of the fault remedied by a workshop.

Vehicle messages ⇨ 93.

Electronic stability program

The Electronic Stability Program (ESP®Plus) improves driving stability when necessary, regardless of the type of road surface or tyre grip. It also prevents the drive wheels from spinning.

As soon as the vehicle starts to swerve (understeer/oversteer), engine output is reduced and the wheels are braked individually. This

considerably improves the driving stability of the vehicle on slippery road surfaces.

ESP®Plus is operational as soon as the ignition is switched on and control indicator extinguishes in the instrument cluster. A corresponding message also appears in the Driver Information Centre (DIC) ⇨ 92.

When ESP®Plus comes into action flashes.

⚠ Warning

Do not let this special safety feature tempt you into taking risks when driving.

Adapt speed to the road conditions.

Control indicator ⇨ 89.

Trailer stability assist (TSA) ⇨ 145.

Enhanced Traction function

If necessary, in the event of soft ground, mud or snow-covered road surfaces, ESP®Plus can be deactivated to enhance traction:

Press on the instrument panel.

Control indicator illuminates in the instrument cluster and a corresponding message appears in the DIC ⇨ 92.

When vehicle speed reaches 50 km/h, the system switches automatically from Enhanced Traction function to ESP®Plus operation. Control indicator extinguishes in the instrument cluster.

ESP®Plus is reactivated by pressing again. Control indicator extinguishes.

ESP®Plus is also reactivated the next time the ignition is switched on.

Fault

If the system detects a fault, control indicator ⇨ 89 illuminates together with ⇨ 88 in the instrument cluster and a corresponding message appears in the DIC ⇨ 92.

The Electronic stability program (ESP®Plus) is not operational. Have the cause of the fault remedied by a workshop.

Vehicle messages ⇨ 93.

Driver assistance systems

⚠ Warning

Driver assistance systems are developed to support the driver and not to replace the driver's attention.

The driver accepts full responsibility when driving the vehicle.

When using driver assistance systems, always take care regarding the current traffic situation.

Cruise control

The cruise control can store and maintain speeds of 30 km/h and above. Deviations from the stored speeds may occur when driving uphill or downhill.

For safety reasons, the cruise control cannot be activated until the brake pedal has been operated once.

Do not use the cruise control if it is not advisable to maintain a constant speed.

Control indicators and ⇨ 92.

Activation

Press ; control indicator illuminates green in the instrument cluster.

Cruise control is now in standby mode and a corresponding message appears in the Driver Information Centre (DIC).

Accelerate to the desired speed and press + or −. The current speed is now stored and maintained and the accelerator pedal can be released.

Control indicator illuminates green in the instrument cluster together with and a corresponding message appears in the DIC.

Vehicle speed can be increased by depressing the accelerator pedal. The stored speed flashes in the instrument cluster. When the accelerator pedal is released, the previously stored speed is resumed.

Cruise control remains activated while gearshifting.

The speed is saved until the ignition is switched off.

Increase speed

With cruise control active, the vehicle speed can be increased continuously or in small increments by holding down or tapping + repeatedly.

When the switch is released the current speed is stored and maintained.

Alternatively, accelerate to the desired speed and store by pressing +.

Reduce speed

With cruise control active, the vehicle speed can be decreased continuously or in small increments by holding down or tapping − repeatedly.

When the switch is released the current speed is stored and maintained.

Deactivation

Press O; cruise control is deactivated and the green control indicator extinguishes in the instrument cluster.

Automatic deactivation:

- vehicle speed drops below 30 km/h
- the brake pedal is depressed
- the clutch pedal is depressed
- selector lever in **N**
- engine speed is in a very low or very high range

The speed is stored and a corresponding message appears in the DIC.

Reactivation

Press **R** at a speed above 30 km/h.

If the stored speed is much higher than the current speed, the vehicle will accelerate powerfully until the stored speed is obtained.

Pressing **+** will also reactivate the cruise control function, but at the current vehicle speed only, not the stored speed.

Deleting the stored speed

Press ⌀; Green control indicators ⌀° and ⌀ extinguish in the instrument cluster.

Cruise control speed limiter

The speed limiter prevents the vehicle exceeding a preset maximum speed above 30 km/h.

Activation

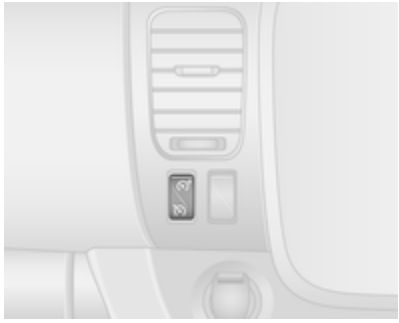

Press ⌀°; control indicator ⌀° illuminates yellow in the instrument cluster.

Cruise control speed limiter function is now in standby mode and a corresponding message appears in the DIC.

Accelerate to the desired speed and press **+** or **−**. The current speed is recorded.

The vehicle can be driven normally but it will not be possible to exceed the programmed speed limit except in an emergency.

Where the limit speed cannot be maintained, e.g. when driving on a steep decline, the limit speed will flash in the DIC ⇨ 92, accompanied by a warning chime.

Increase limit speed

The limit speed can be increased continuously or in small increments by holding down or tapping **+** repeatedly.

Reduce limit speed

The limit speed can be decreased continuously or in small increments by holding down or tapping **−** repeatedly.

Exceeding the limit speed

In the event of an emergency, it is possible to exceed the limit speed by depressing the accelerator pedal firmly beyond the point of resistance. The limit speed will flash in the DIC ⇨ 92 during this period, accompanied by a warning chime.

Release the accelerator pedal and the speed limiter function is reactivated once a speed lower than the limit speed is obtained.

Note
In vehicles fitted with a Speed limiter, fully depressing the accelerator pedal will not allow you to exceed the set maximum vehicle speed. Speed limiter ⇨ 138.

Deactivation

Press **O**; Speed limiter is deactivated and the vehicle can be driven normally.

The limit speed is stored and a corresponding message appears in the DIC.

Reactivation

Press **R**; The speed limiter function is reactivated.

Pressing **+** will also reactivate the speed limiter function, but at the current vehicle speed only, not the stored speed.

Deleting the limit speed

Press ⚲; Yellow control indicator ⚲ extinguishes in the instrument cluster.

Speed limiter

Maximum speed limiter

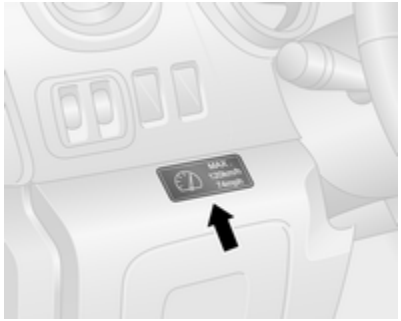

In accordance with local or national regulations, the vehicle may be equipped with a fixed maximum speed limiter that cannot be disabled.

If equipped, a warning label indicating the fixed maximum speed limit (90 to 130 km/h) is located on the instrument panel.

Deviations from the maximum speed limit may occur briefly when driving downhill, for physical reasons.

A warning buzzer will sound for 10 seconds every 40 seconds if the vehicle briefly exceeds the set limit.

Vehicles also equipped with cruise control speed limiter: the maximum speed cannot be exceeded by depressing the accelerator pedal firmly beyond the point of resistance.

Cruise control speed limiter ⇨ 135.

Parking assist

The parking assist makes reverse parking easier by measuring the distance between the rear of the vehicle and obstacles. It is the driver, however, who bears full responsibility for parking.

The system consists of four ultrasonic parking sensors in the rear bumper.

Note
Attached parts in the detection area cause system malfunction.

Activation

When reverse gear is engaged, the system switches itself on automatically. Readiness for operation is indicated by a brief acoustic signal.

An obstacle is indicated by buzzers and, depending on vehicle, is also indicated in the Info-Display. The interval between the buzzers becomes shorter as the vehicle gets closer to the obstacle. When the distance is less than 30 cm, the buzzer is continuous.

Note
In versions with Info-Display indication, the volume of the buzzer can be adjusted via the Infotainment system. Refer to Infotainment system manual for further information.

Deactivation

It is possible to deactivate or temporarily deactivate the system.

Note
In versions with Info-Display indication, the function can be deactivated via the Infotainment system. Refer to Infotainment system manual for further information.

Temporary deactivation

Temporarily deactivate the system by pressing P on the instrument panel with the ignition on. LED illuminates in the button when deactivated.

When reverse gear is selected no acoustic signal will sound, indicating deactivation.

The function is reactivated by pressing P again or the next time the ignition is switched on.

Permanent deactivation

Permanently deactivate the system by pressing and holding P on the instrument panel for approx.
3 seconds with the ignition on. Control indicator in the button illuminates continuously.

The system is deactivated and will not operate. When reverse gear is selected no acoustic signal will sound, indicating deactivation.

The function is reactivated by pressing and holding P for approx. 3 seconds.

Fault

If the system detects an operating fault, when selecting reverse gear a continuous acoustic alarm will sound for approx. 5 seconds, a corresponding message appears in the Driver Information Centre (DIC) ⇨ 92 and illuminates in the instrument cluster ⇨ 88. Consult a workshop to have the cause of the fault remedied.

Caution

When reversing, the area should be free from obstacles which could impact on the underside of the vehicle.

Impact to the rear axle, which may not be visible, could lead to uncharacteristic changes in the vehicle handling. In the event of such an impact, consult a workshop.

Vehicle messages ⇨ 93.

Basic notes on parking assist system

⚠ Warning

Under certain circumstances, various reflective surfaces on objects or clothing as well as external noise sources may cause the system to fail to detect obstacles.

Special attention must be paid to low obstacles which can damage the lower part of the bumper.

Caution

Performance of the sensors can be reduced when sensors are covered, e.g. by ice or snow.

Performance of the parking assist systems can be reduced due to heavy loading.

Special conditions apply if there are taller vehicles involved (e.g. off-road vehicles, mini vans, vans). Object identification in the upper part of these vehicles cannot be guaranteed.

Objects with a very small reflection cross-section, e.g. objects of narrow size or soft materials, may not be detected by the system.

The parking assist system will not avoid a collision with objects which are out of the detection range of the sensors.

Rear view camera

The rear view camera assists the driver when reversing by displaying a view of the area behind the vehicle in the interior mirror or in the Info-Display.

⚠ Warning

The rear view camera does not replace driver vision. Note that objects that are outside the camera's field of view, e.g. below the bumper or underneath the vehicle, are not displayed.

Do not reverse the vehicle by only looking at the display and check the surrounding area behind and around the vehicle before reversing.

Activation

Rear view camera is automatically activated when reverse gear is engaged. An audible signal confirms activation.

Functionality

The camera is mounted above the rear doors/tailgate.

The area displayed by the camera is limited. The distance of the image that appears on the display differs from the actual distance.

Trajectory lane display (1)

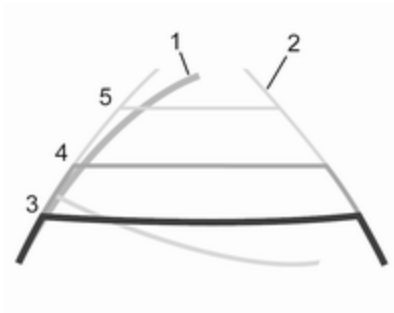

Depending on version, the trajectory lane (1) of the vehicle is shown in blue on the Info-Display. It shows the path of the vehicle in accordance with the steering angle.

Fixed lane display (2)

The fixed lane display (2) shows the path of the vehicle if the wheels are kept straight.

Guide lines (3, 4, 5) are used together with the fixed lane display (2) and indicate the distance behind the vehicle.

The guide line intervals are as follows:

3 (red) : 30 cm
4 (yellow) : 70 cm
5 (green) : 150 cm

Settings

Settings, e.g. brightness, contrast and colours can be changed via the Infotainment system. The feature may also be switched off permanently. Refer to Infotainment system manual for further information.

Deactivation

The camera is deactivated after a delay if reverse gear is not engaged for approx. 5 seconds.

Fault

The rear view camera may not operate properly when:

- the surrounding is dark
- the sun or the beam of headlights is shining directly into the camera lens
- ice, snow, mud, or anything else covers the camera lens. Clean the lens, rinse it with water, and wipe it with a soft cloth
- the rear doors/tailgate are not closed correctly
- the vehicle had a rear-end accident
- there are extreme temperature changes

Fuel

Fuel for diesel engines

Only use diesel fuel that complies with EN 590. The fuel must have low sulphur content (max. 10 ppm). Equivalent standardised fuels with a biodiesel (= FAME according to EN14214) content of max. 7% by volume (like DIN 51628 or equivalent standards) may be used.

In countries outside the European Union, use Euro-Diesel fuel with a sulphur concentration below 50 ppm.

Caution
Use of fuel that does not comply to EN 590 or similar can lead to engine powerloss, increased wear or engine damage and loss of warranty.

Do not use marine diesel oils, heating oils, Aquazole and similar diesel-water emulsions. Diesel fuels must not be diluted with fuels for petrol engines.

The flow and filterability of diesel fuels are temperature-dependent. When temperatures are low, refuel with diesel fuel with guaranteed winter properties.

Diesel fuel filter ⇨ 154, diesel fuel system bleeding ⇨ 154.

Refuelling

⚠ Danger

Before refuelling, switch off engine and any external heaters with combustion chambers.

Vehicles with stop-start system: The engine must be switched off and the ignition key removed, to avoid risk of engine being restarted automatically by the system.

Switch off any mobile phones.

Follow the operating and safety instructions of the filling station when refuelling.

⚠ Danger

Fuel is flammable and explosive. No smoking. No naked flames or sparks.

If you can smell fuel in your vehicle, have the cause of this remedied immediately by a workshop.

Caution

In case of misfuelling, do not switch on ignition.

Note
To ensure the fuel level is displayed correctly, the ignition must be switched off before refuelling. Avoid minor fuel top-ups (e.g. less than 5 litres) to ensure accurate readings.

The fuel filler flap is located on the left-hand side of the vehicle.

The fuel filler flap can only be opened if the vehicle is unlocked and the left-hand door is opened.

Pull flap to open.

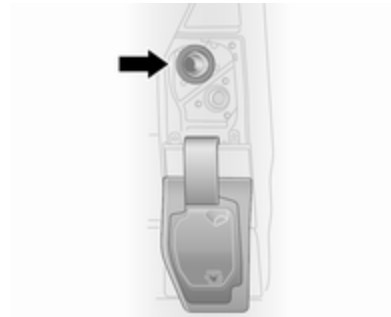

To open the fuel filler cap, turn anticlockwise.

The fuel filler cap can be retained in the bracket on the fuel filler flap.

For refuelling, fully insert the pump nozzle and switch it on.

After automatic cut-off, it can be topped up by operating the pump nozzle a maximum of two more times.

Caution

Wipe off any overflowing fuel immediately.

When refuelling is complete, replace the fuel filler cap and turn clockwise as far as it will go.

Close the fuel filler flap.

Fuel filler cap

Only use genuine fuel filler caps. Diesel-engined vehicles have special fuel filler caps.

Fuel consumption - CO_2-Emissions

The values for fuel consumption (combined) of the model Opel Vivaro is within a range of 7.4 to 5.7 l/100 km.

The CO_2 emission (combined) is within a range of 195 to 149 g/km.

For the values specific to your vehicle, refer to the EEC Certificate of Conformity provided with your vehicle or other national registration documents.

General information

The official fuel consumption and specific CO_2 emission figures quoted relate to the EU base model with standard equipment.

Fuel consumption data and CO_2 emission data are determined according to regulation R (EC) No. 715/2007 (in the latest applicable version), taking into consideration the vehicle weight in running order, as specified by the regulation.

The figures are provided only for the purpose of comparison between different vehicle variants and must not be taken as a guarantee for the actual fuel consumption of a particular vehicle.

Additional equipment may result in slightly higher results than the stated fuel consumption and CO_2 figures.

Furthermore, fuel consumption is dependent on personal driving style as well as road and traffic conditions.

Trailer hitch

General information

Entrust retrofitting of towing equipment to a workshop. It may be necessary to make changes that affect the cooling system, heat shields or other equipment. Only use towing equipment that has been approved for your vehicle.

Driving characteristics and towing tips

In the case of trailers with brakes, attach the breakaway stopping cable.

Before attaching a trailer, lubricate the coupling ball. However, do not do so if a stabiliser, which acts on the coupling ball, is being used to reduce snaking movements. For trailers with low driving stability the use of a stabiliser is recommended.

A maximum speed of 80 km/h must not be exceeded, even in countries where higher speeds are permitted.

If the trailer starts snaking, drive more slowly, do not attempt to correct the steering and brake sharply if necessary.

When driving downhill, drive in the same gear as if driving uphill and drive at a similar speed.

Adjust tyre pressure to the value specified for full load ⇨ 201.

Trailer towing

Trailer loads

The permissible trailer loads are vehicle and engine-dependent maximum values which must not be exceeded. The actual trailer load is the difference between the actual gross weight of the trailer and the actual coupling socket load with the trailer coupled.

The permissible trailer loads are specified in the vehicle documents. In general, they are valid for gradients up to max. 12%.

The permitted trailer load applies up to the specified incline and up to an altitude of 1000 metres above sea level. Since engine power decreases as altitude increases due to the air becoming thinner, therefore reducing climbing ability, the permissible gross train weight also decreases by 10% for every 1000 metres of additional altitude. The gross train weight does not have to be reduced when driving on roads with slight inclines (less than 8%, e.g. motorways).

The permissible gross train weight must not be exceeded. This weight is specified on the identification plate ⇨ 188.

Vertical coupling load

The vertical coupling load is the load exerted by the trailer on the coupling ball. It can be varied by changing the weight distribution when loading the trailer.

The maximum permissible vertical coupling load is specified on the towing equipment identification plate and in the vehicle documents. Always aim for the maximum load, especially in the case of heavy trailers. The vertical coupling load should never fall below 25 kg.

In the case of trailer loads of 1200 kg or more, the vertical coupling load should not be less than 50 kg.

Rear axle load

When the trailer is coupled and the towing vehicle fully loaded (including all occupants), the permissible rear axle load (see identification plate or vehicle documents) must not be exceeded.

Trailer stability assist

If the system detects snaking movements, engine power is reduced and the vehicle/trailer combination is selectively braked until the snaking ceases. While the system is working, keep steering wheel as still as possible.

Trailer stability assist (TSA) is a function of the Electronic Stability Program (ESP®Plus) ⇨ 133.

Vehicle care

General Information **147**
Accessories and vehicle modifications 147
Vehicle storage 147
End-of-life vehicle recovery 147
Vehicle checks **148**
Performing work 148
Bonnet 148
Engine oil 149
Engine air filter 150
Engine coolant 150
Power steering fluid 151
Washer fluid 152
Brakes 152
Brake fluid 152
Vehicle battery 152
Diesel fuel filter 154
Diesel fuel system bleeding 154
Wiper blade replacement 155
Bulb replacement **156**
Headlights 156
Fog lights 156
Front turn signal lights 157
Tail lights 157
Side turn signal lights 158
Centre high-mounted brake light 158
Reversing light 159
Number plate light 159
Fog tail light 159
Interior lights 160
Instrument panel illumination ... 160
Electrical system **161**
Fuses 161
Instrument panel fuse box 162
Vehicle tools **165**
Tools 165
Wheels and tyres **166**
Tyres 166
Winter tyres 166
Tyre designations 166
Tyre pressure 166
Tyre pressure monitoring system 168
Tread depth 169
Changing tyre and wheel size . 170
Wheel covers 170
Tyre chains 170
Tyre repair kit 171
Wheel changing 173
Spare wheel 175
Jump starting **176**
Towing **178**
Towing the vehicle 178
Towing another vehicle 179
Appearance care **179**
Exterior care 179
Interior care 181

General Information

Accessories and vehicle modifications

We recommend the use of genuine parts and accessories and factory approved parts specific for your vehicle type. We cannot assess or guarantee reliability of other products - even if they have a regulatory or otherwise granted approval.

Do not make any modifications to the electrical system, e.g. changes of electronic control units (chip tuning).

Caution
When transporting the vehicle on a train or on a recovery vehicle, the mud flaps might be damaged.

Vehicle storage

Storage for a long period of time

If the vehicle is to be stored for several months:

- Wash and wax the vehicle.
- Have the wax in the engine compartment and underbody checked.
- Clean and preserve rubber seals.
- Fill up fuel tank completely.
- Change the engine oil.
- Drain the washer fluid reservoir.
- Check the coolant antifreeze and corrosion protection.
- Adjust tyre pressure to the value specified for full load.
- Park vehicle in a dry, well ventilated place. Engage first or reverse gear. Prevent the vehicle from rolling.
- Do not apply the parking brake.
- Open the bonnet, close all doors and lock the vehicle.

Putting back into operation

When the vehicle is to be put back into operation:

- Check tyre pressure.
- Fill up the washer fluid reservoir.
- Check the engine oil level.
- Check the coolant level.
- Fit the number plate, if necessary.

End-of-life vehicle recovery

Information on end-of-life vehicle recovery centres and the recycling of end-of-life vehicles is available on our website. Only entrust this work to an authorised recycling centre.

Vehicle checks

Performing work

⚠ Warning

Only perform engine compartment checks when the ignition is off.

The cooling fan may start operating even if the ignition is off.

⚠ Danger

The ignition system generates extremely high voltages. Do not touch.

The caps for topping up the engine oil, the coolant, the washer fluid and the oil dipstick handle are yellow for ease of identification.

Bonnet

Opening

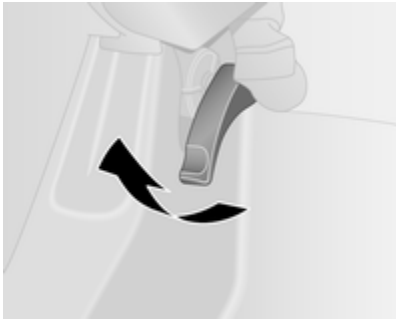

Pull the release lever and return it to its original position.

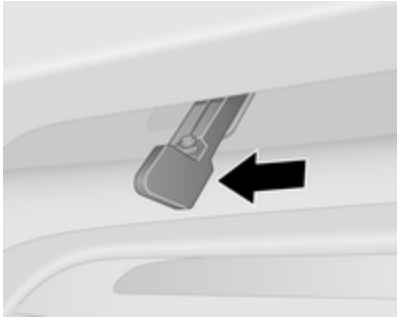

Move the safety catch (located slightly right of centre) sideways to the left vehicle side and open the bonnet.

The bonnet is held open automatically by a lifter.

If the bonnet is opened during an Autostop, the engine will be restarted automatically for safety reasons.

Stop-start system ⇨ 121.

Closing

Lower the bonnet and allow it to fall into the latch from a low height (approx. 30 cm). Check that the bonnet is engaged.

Caution
Do not press the bonnet into the latch, to avoid dents.

Engine oil

Check the engine oil level manually on a regular basis to prevent damage to the engine.

Ensure that the correct specification of oil is used. Recommended fluids and lubricants ⇨ 185.

The maximum engine oil consumption is 0.6 l per 1000 km.

Check with the vehicle on a level surface. The engine must be at operating temperature and switched off for at least 10 minutes.

Pull out the dipstick, wipe it clean, insert it to the stop on the handle, pull out and read the engine oil level.

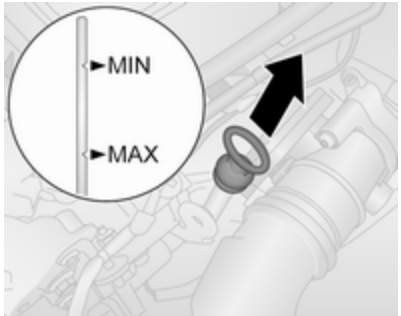

When the engine oil level has dropped to the **MIN** mark, top-up engine oil.

Caution
Do not allow the engine oil level to drop below the minimum level!

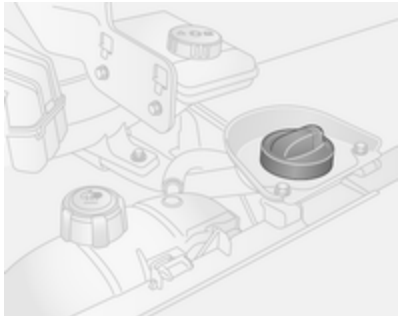

We recommend the use of the same grade of engine oil that was used at the last change.

The engine oil level must not exceed the maximum mark **MAX** on the dipstick.

Caution
Overfilled engine oil must be drained or suctioned out.

To prevent spillage when replenishing the engine oil, we recommend using a funnel to top-up the engine oil. Ensure funnel is securely located onto the filler pipe.

After topping-up, put the funnel into a plastic bag and stow it securely.

A stabilization of the engine oil consumption will not take place until the vehicle has been driven several thousand kilometres. Only then can the actual degree of consumption be established.

If consumption exceeds more than 0.6 litres every 1000 km after this running-in period, consult a workshop.

Capacities ⇨ 200.

Fit the cap on straight and tighten it.

Engine air filter

Engine air flow indicator

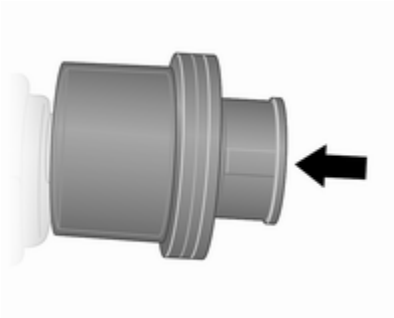

On certain models, an indicator is located in the engine induction system and indicates if the air-intake to the engine is restricted.

Clear : No restriction
Red tell-tale : Restricted

If the red tell-tale is displayed when the engine is running, consult a workshop.

Engine coolant

The coolant provides freeze protection down to approx. -28 °C.

Caution
Only use approved antifreeze.

Coolant level

Caution
Too low a coolant level can cause engine damage.

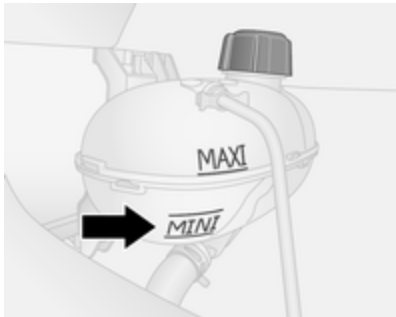

If the cooling system is cold, the coolant level should be just above the **MINI** mark. Top-up if the level is low.

⚠Warning

Allow the engine to cool before opening the cap. Carefully open the cap, relieving the pressure slowly.

Top-up with antifreeze. If no antifreeze is available, use clean tap water or distilled water. Install the cap tightly. Have the antifreeze concentration checked and have the cause of the coolant loss remedied by a workshop.

If a substantial amount of coolant is required, it will be necessary to bleed any trapped air from the cooling system. Seek the assistance of a workshop.

If the coolant temperature is too high, control indicator ⇨ 89 illuminates red in the instrument cluster, together with STOP ⇨ 88. Consult a workshop if coolant level is sufficient.

Power steering fluid

Caution

Extremely small amounts of contamination can cause steering system damage and cause it to not work properly. Do not allow contaminates to contact the fluid side of the reservoir cap or from entering the reservoir.

The power steering fluid reservoir is located below the front left wheel arch, behind a trim panel.

The fluid level normally does not need to be checked. If an unusual noise is heard during steering or if the power steering reacts conspicuously, seek the assistance of a workshop.

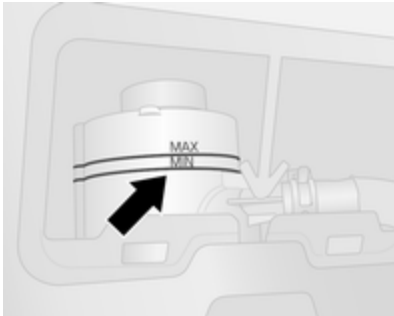

If the fluid level in the reservoir falls below the **MIN** mark consult a workshop.

Washer fluid

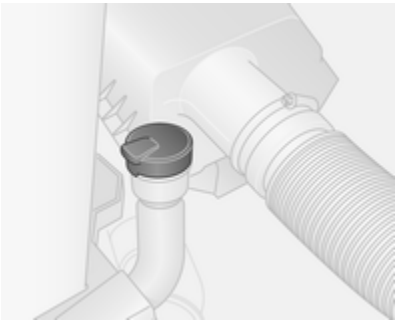

Fill with clean water mixed with a suitable quantity of windscreen washer fluid which contains antifreeze.

Caution

Only washer fluid with a sufficient antifreeze concentration provides protection at low temperatures or a sudden drop in temperature.

Use of washer fluid containing isopropanol can damage exterior lamps.

Brakes

A squealing noise indicates that the brake lining is at its minimum thickness. Continued driving is possible but have the brake lining replaced as soon as possible.

Once new brake linings are installed, do not brake unnecessarily hard for the first few journeys.

Brake fluid

⚠ Warning

Brake fluid is poisonous and corrosive. Avoid contact with eyes, skin, fabrics and painted surfaces.

The brake fluid level must be between the **MINI** and **MAXI** marks.

When topping up, ensure maximum cleanliness as contamination of the brake fluid can lead to brake system malfunctions. Have the cause of the loss of brake fluid remedied by a workshop.

Only use high-performance brake fluid approved for your vehicle.

Brake fluid ⇨ 185.

Vehicle battery

The vehicle battery is maintenance-free provided that the driving profile allows sufficient charging of the

battery. Short-distance driving and frequent engine starts can discharge the battery. Avoid the use of unnecessary electrical consumers.

Batteries do not belong in household waste. They must be disposed of at an appropriate recycling collection point.

Laying up the vehicle for more than 4 weeks can lead to battery discharge.

Ensure the ignition is switched off before connecting or disconnecting the vehicle battery.

Replacing the vehicle battery

In vehicles with an AGM (Absorptive Glass Mat) battery, make sure to have the battery replaced with another AGM battery.

An AGM battery can be identified by the label on the battery. We recommend the use of an original Opel battery.

Note
Using an AGM vehicle battery different from the original Opel vehicle battery may result in a lower performance of the stop-start system.

We recommend that you have the vehicle battery replaced by a workshop.

Stop-start system ⇨ 121.

Charging the vehicle battery

⚠ Warning

On vehicles with stop-start system, ensure that the charging potential does not exceed 14.6 volts when using a battery charger. Otherwise the vehicle battery might be damaged.

⚠ Danger

Ensure adequate ventilation when charging the battery. There is a risk of explosion if gases generated during charging are allowed to accumulate!

Jump starting ⇨ 176.

Warning label

Meaning of symbols:

- No sparks, naked flames or smoking.
- Always shield eyes. Explosive gases can cause blindness or injury.
- Keep the vehicle battery out of reach of children.
- The vehicle battery contains sulfuric acid which could cause blindness or serious burn injuries.
- See the Owner's Manual for further information.
- Explosive gas may be present in the vicinity of the battery.

Diesel fuel filter

The diesel fuel filter is accessible from the underside of the vehicle.

Drain filter of residual water at every engine oil change.

Place a container underneath the filter housing. Loosen the knurled screw on the lower part of the filter by approx. one turn, to drain off the water.

The filter is drained as soon as water-free diesel fuel emerges. Retighten the screw.

Check diesel fuel filter at shorter intervals if the vehicle is subjected to extreme operating conditions.

Diesel fuel system bleeding

If the fuel tank has been run dry, it will be necessary to air vent or bleed the diesel fuel system.

Refuel then proceed as follows:

With ignition key

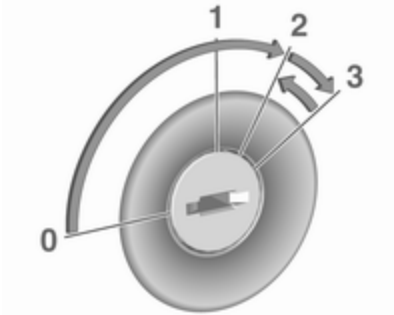

- Switch on the ignition (key to position **2**) for 5 seconds at a time.
- Switch off ignition (key to position **1**) for 3 seconds.
- Repeat this process multiple times.
- Start the engine (key to position **3**) then switch off (key to position **0**).

Ignition switch positions ⇨ 118.

With power button

- Insert the electronic key in the card reader.
- Press **START/STOP** without pressing any of the pedals.
- Wait a few minutes before starting engine.

Power button ⇨ 118.

If the engine fails to start, seek the assistance of a workshop.

Starting the engine ⇨ 120.

Wiper blade replacement

Wiper blades on the windscreen

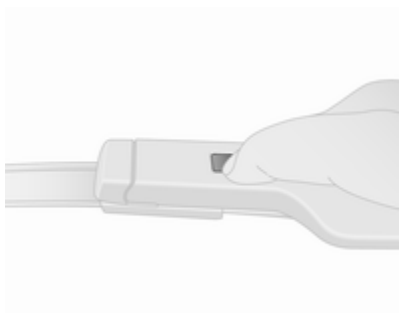

Lift the wiper arm, press button to disengage the wiper blade and remove.

Attach new wiper blade slightly angled to the wiper arm and push until it engages.

Lower wiper arm carefully.

Wiper blade on the rear window

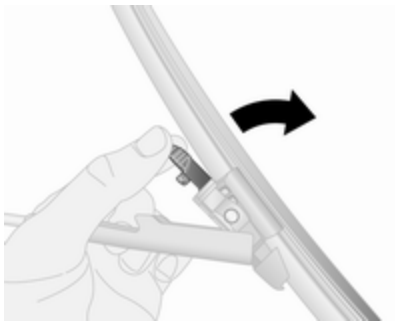

Lift wiper arm, press retaining lugs together to disengage the wiper blade and remove.

Lower wiper arm carefully.

Bulb replacement

Switch off the ignition and turn off the relevant switch or close the doors.

Only hold a new bulb at the base. Do not touch the bulb glass with bare hands.

Use only the same bulb type for replacement.

Bulb check

After a bulb replacement, switch on the ignition, operate and check the lights.

Headlights

Low beam and high beam

Replace headlight bulbs from within the engine compartment.

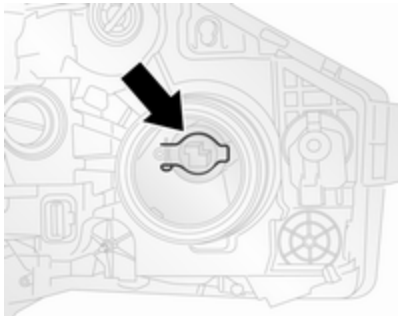

1. Remove protective cover by rotating it anticlockwise.
2. Remove harness connector.
3. Release retaining clip and remove bulb.
4. Renew bulb and install retaining clip ensuring that bulb is in correct orientation.
5. Install harness connector and protective cover.

Sidelights

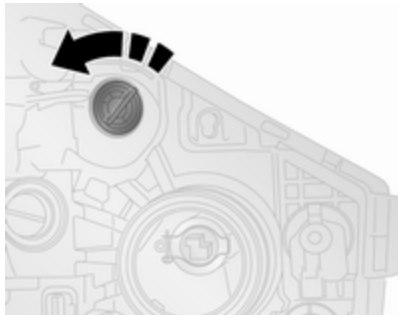

1. Remove bulb holder from reflector housing by rotating it anticlockwise.
2. Renew bulb.
3. Install bulb holder in reflector housing.

Fog lights

Access the front fog light bulb from beneath the vehicle.

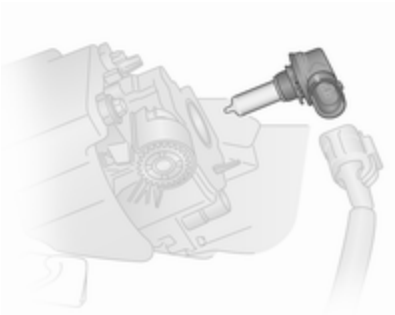

1. On left vehicle side, release retaining clip and open the access cover.

   On right vehicle side, remove screws and retaining clips to remove the access cover.
2. Remove harness connector.
3. Rotate bulb holder anticlockwise and remove bulb.
4. Renew bulb and install bulb holder.
5. Install harness connector and access cover.

Front turn signal lights

1. Remove bulb holder from reflector housing by rotating anticlockwise.
2. Renew bulb.
3. Install bulb holder in reflector housing.

Tail lights

Rear brake, turn signal and tail lights

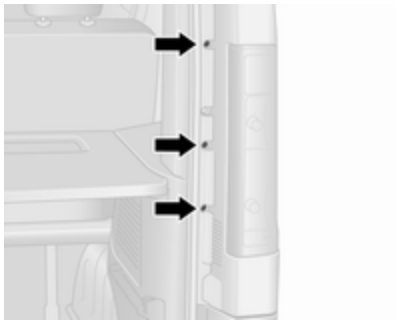

1. Remove the 3 screws (using the tool supplied).
2. Carefully pull lamp assembly from retaining pins on the outer side and remove.

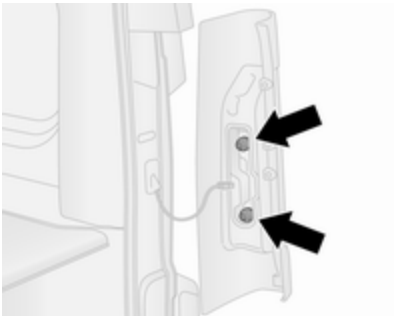

3. Rotate bulb holder anticlockwise to separate from lamp assembly.
4. Renew bulb.
5. Push to install the bulb holder into the lamp assembly, then rotate clockwise to secure.
6. Check that the wiring harness is located correctly.
7. Replace lamp assembly into original position, ensuring that it is seated correctly.
8. Fit lamp assembly onto retaining pins and replace the 3 screws.

Side turn signal lights

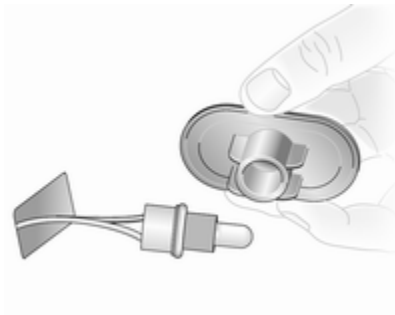

1. Release lamp assembly from fender by depressing clips using a suitable tool and lift out lamp assembly from aperture.
2. Remove bulb holder from lamp assembly by rotating anticlockwise and renew bulb.
3. Install bulb holder in lamp assembly and install lamp assembly into aperture.

Centre high-mounted brake light

1. Open the rear doors/tailgate.

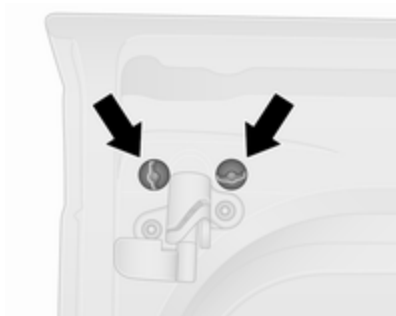

2. Remove the 2 bolts from inside the rear doors/tailgate.

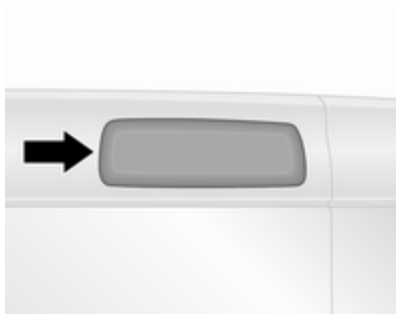

3. From outside the vehicle, remove the bulb holder by releasing the clips with a flat blade screwdriver.

4. Renew bulb.
5. Install bulb holder and replace the 2 bolts.

Reversing light

1. Remove the 2 screws (using the tool supplied) and remove lamp assembly.
2. Rotate bulb housing anticlockwise to separate from lamp assembly.
3. Renew lower bulb.
4. Push to install the bulb holder into the lamp assembly, then rotate clockwise to secure.
5. Install lamp assembly with the 2 screws.

Number plate light

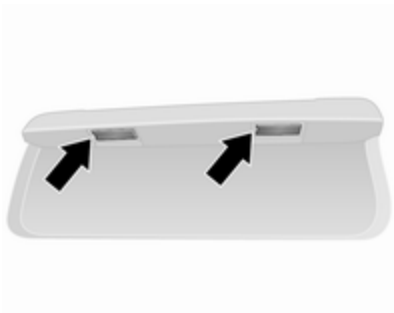

1. Prise out lamp using a flat blade screwdriver.
2. Prise off lens.
3. Renew bulb.
4. Install lens and replace lamp in housing.

Fog tail light

1. Remove the 2 screws (using the tool supplied) and remove lamp assembly.
2. Rotate bulb housing anticlockwise to separate from lamp assembly.
3. Renew upper bulb.
4. Push to install the bulb holder into the lamp assembly, then rotate clockwise to secure.
5. Install lamp assembly with the 2 screws.

Interior lights

Front and rear courtesy lights

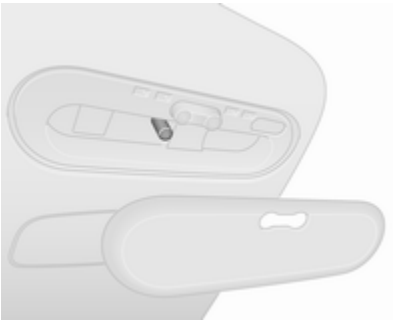

1. Release lens assembly from the clips and the locator using a flat blade screwdriver.
2. Renew bulb.
3. Install lens assembly.

Load compartment light

1. Release lens assembly from the clips using a flat blade screwdriver.
2. Remove rear cover on lamp assembly.
3. Renew bulb.
4. Install rear cover and lamp assembly.

Glovebox light

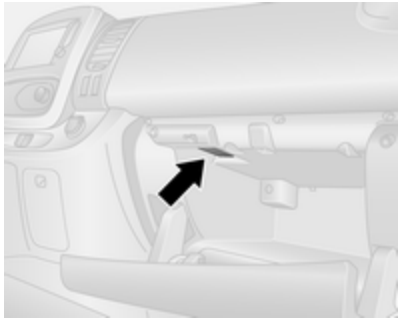

1. Remove lens assembly using a flat blade screwdriver.
2. Renew bulb.
3. Install lens assembly.

Instrument panel illumination

Have bulbs replaced by a workshop.

Electrical system

Fuses

Data on the replacement fuse must match the data on the defective fuse.

Before replacing a fuse, turn off the respective switch and the ignition.

There are different types of fuses in the vehicle.

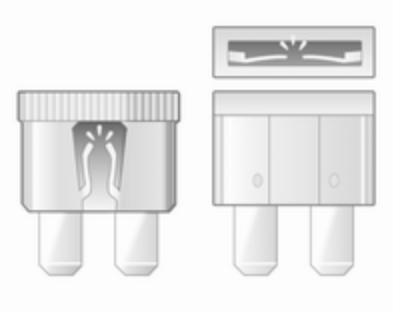

Depending on the type of fuse, a blown fuse can be recognised by its melted wire. Do not replace the fuse until the cause of the fault has been remedied.

It is advisable to carry a full set of fuses. Provision is made in the fuse box for the storing of spare fuses.

Some functions are protected by several fuses.

Fuses may also be inserted without existence of a function.

Note
Not all fuse box descriptions in this Owner's Manual may apply to your vehicle. Refer to the fuse box label, where fitted.

Fuse extractor

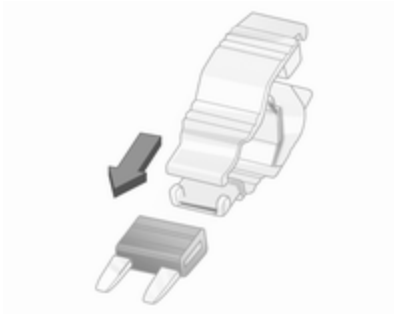

A fuse extractor may be located on the instrument panel fuse box cover.

Place the fuse extractor on the various types of fuse from the top or side, and withdraw fuse.

Instrument panel fuse box

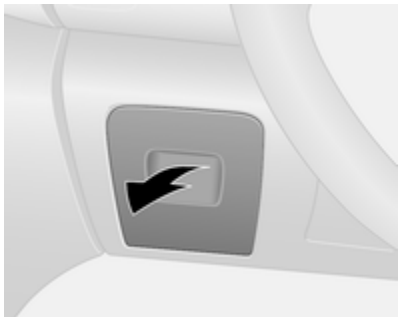

The fuse box is located on the left-hand side of the instrument panel, behind a trim panel.

Pull upper part of trim panel and remove to access the fuse box.

Do not store any objects behind this panel.

Some circuits may be protected by several fuses.

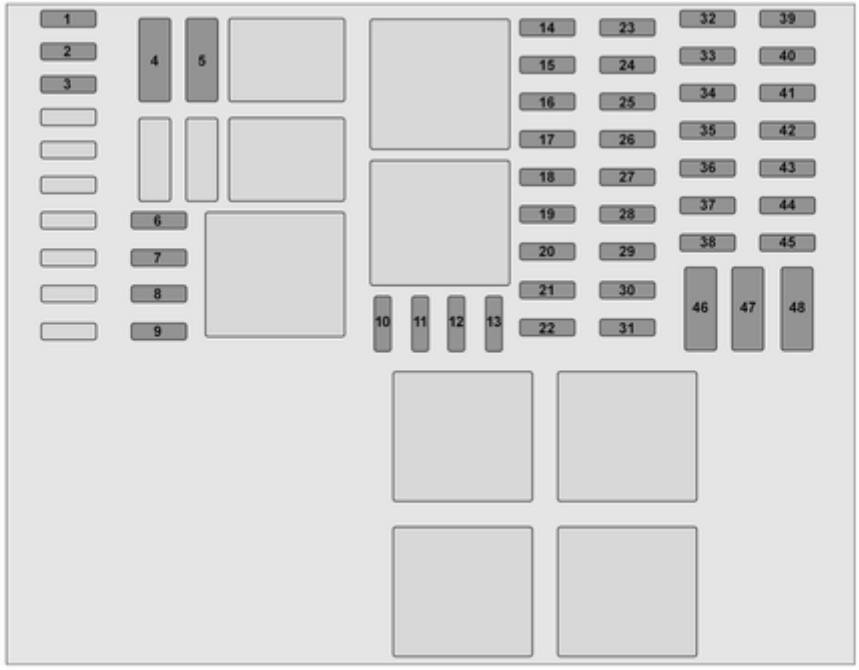
1
2
3
4
5
6
7
8
9
10
11
12
13
14
15
16
17
18
19
20
21
22
23
24
25
26
27
28
29
30
31
32
33
34
35
36
37
38
39
40
41
42
43
44
45
46
47
48

No.	Circuit
1	Adblue injection battery
2	Vehicle battery (with electronic key system)
3	APC battery backup (with electronic key system)
4	Heating and ventilation system
5	Adaptations
6	Adaptations
7	Heating and ventilation system
8	Additional heating and ventilation / air conditioning system
9	Supplementary heating and ventilation system
10	Electric exterior mirrors / additional adaptations
11	Heated exterior mirrors
12	Radio / multimedia / electric exterior mirrors / diagnostic socket
13	Multimedia / trailer hitch
14	Courtesy lights / battery discharge protection
15	Fuel injection system / tyre pressure monitoring system / electronic key system
16	Hazard warning flashers / turn and lane-change signals
17	Central locking
18	Left-hand high beam / right-hand low beam / tail lights / left-hand daytime running light
19	Front fog lights / rear fog lights / number plate lighting
20	Alarm / horn / lighting / wiper
21	Instrument cluster
22	Light switch
23	Rear window wiper / windscreen washer pump / horn
24	APC general battery
25	Reversing lights
26	Brake switch
27	Fuel injection / starter
28	Airbag / steering column lock
29	Passenger power window
30	Power steering
31	Brake lights
32	APC battery backup (with electronic key system)
33	Service display
34	Cigarette lighter / power outlet
35	Right-hand high beam / left-hand low beam / sidelights / right-hand daytime running light
36	Brake lights / ABS / immobiliser
37	Interior lighting / air conditioning
38	Starting with electronic key system
39	Rear window wiper
40	Warning chimes

No.	Circuit
41	Load compartment power outlet
42	Driver power window
43	Rear power outlet
44	Starting / body control module
45	Heated seats
46	Heating / air conditioning
47	Windscreen wiper
48	Tachograph

After having changed defective fuses, replace the trim panel.

Vehicle tools

Tools

The jack, wheel wrench, wheel bolt sleeve, torx key, adapters, wheel cover hook, towing eye are contained in a unit, stowed under the driver's seat.

Slide seat forwards and fold the backrest forwards ⇨ 46 to access the tool box. The tool box may be secured in position with a wing nut.

Wheel changing ⇨ 173, Spare wheel ⇨ 175.

Vehicles with tyre repair kit: The wheel cover hook and torx key are stored within the tyre repair kit case, stowed under the driver's seat.

Tyre repair kit ⇨ 171.

Wheels and tyres

Tyre condition, wheel condition

Drive over edges slowly and at right angles if possible. Driving over sharp edges can cause tyre and wheel damage. Do not trap tyres on the kerb when parking.

Regularly check the wheels for damage. Seek the assistance of a workshop in the event of damage or unusual wear.

We recommend not swapping the front wheels with the rear wheels and vice versa, as this can affect vehicle stability. Always use less worn tyres on the rear axle.

Tyres

Factory-fitted tyres are matched to the chassis and offer optimum driving comfort and safety.

Winter tyres

Winter tyres improve driving safety at temperatures below 7 °C and should therefore be fitted on all wheels.

In accordance with country-specific regulations, a notice indicating the maximum permissible speed for the tyres must be affixed within the driver's field of vision.

Tyre designations

E.g. **195/65 R 16 C 88 Q**

195 : Tyre width, mm
65 : Cross-section ratio (tyre height to tyre width), %
R : Belt type: Radial
RF : Type: RunFlat
16 : Wheel diameter, inches
C : Cargo or commercial use
88 : Load index e.g. 88 is equivalent to 567 kg
Q : Speed code letter

Speed code letter:

Q : up to 160 km/h
S : up to 180 km/h
T : up to 190 km/h
H : up to 210 km/h
V : up to 240 km/h
W : up to 270 km/h

Choose a tyre appropriate for the maximum speed of your vehicle.

The maximum speed is achievable at kerb weight with driver (75 kg) plus 125 kg payload. Optional equipment could reduce the maximum speed of the vehicle.

Directional tyres

Fit directional tyres such that they roll in the direction of travel. The rolling direction is indicated by a symbol (e.g. an arrow) on the sidewall.

Tyre pressure

Check the pressure of cold tyres at least every 14 days and before any long journey. Do not forget the spare wheel. This also applies to vehicles with tyre pressure monitoring system.

The tyre pressure information label on the driver's door frame indicates the original equipment tyres and the correspondent tyre pressures. Always inflate tyres to the pressures shown on the label.

Tyre pressures ⇨ 201.

The tyre pressure data refers to cold tyres. It applies to summer and winter tyres.

Always inflate the spare tyre to the pressure specified for full load.

Incorrect tyre pressures will impair safety, vehicle handling, comfort and fuel economy and will increase tyre wear.

Tyre pressures differ depending on various options. For the correct tyre pressure value, follow the procedure below:

1. Identify the engine identifier code. Engine data ⇨ 190.
2. Identify the respective tyre.

The tyre pressure tables show all possible tyre combinations ⇨ 201.

For the tyres approved for your vehicle, refer to the EEC Certificate of Conformity provided with your vehicle or other national registration documents.

The driver is responsible for correct adjustment of tyre pressure.

⚠ Warning

If the pressure is too low, this can result in considerable tyre warm-up and internal damage, leading to tread separation and even to tyre blow-out at high speeds.

⚠ Warning

For specific tyres the recommended tyre pressure as shown in the tyre pressure table may exceed the maximum tyre pressure as indicated on the tyre. Never exceed the maximum tyre pressure as indicated on the tyre.

Temperature dependency

Tyre pressure depends on the temperature of the tyre. During driving, tyre temperature and pressure increase.

Tyre pressure values provided on the tyre information label and tyre pressure chart are valid for cold tyres, which means at 20 °C. The pressure increases by nearly 10 kPa (0.1 bar) for a 10 °C temperature increase. This must be considered when warm tyres are checked.

Tyre pressure monitoring system

The Tyre Pressure Monitoring System (TPMS) uses radio and sensor technology to check tyre pressure levels.

Caution
Tyre pressure monitoring system warns only about low tyre pressure condition and does not replace regular tyre maintenance by the driver.

All wheels must be equipped with pressure sensors and the tyres must have the prescribed pressure.

Note
In countries where the tyre pressure monitoring system is legally required, the use of wheels without pressure sensors will invalidate the vehicle type approval.

The TPMS sensors monitor the air pressure in the tyres and transmit tyre pressure readings to a receiver located in the vehicle.

Tyre pressure chart ⇨ 201.

Low tyre pressure condition

A detected low tyre pressure condition is indicated by illumination of control indicator ⓘ ⇨ 90 and a corresponding message appears in the DIC.

If ⓘ illuminates, stop as soon as possible and inflate the tyres as recommended ⇨ 201.

After inflating, some driving may be required to update the tyre pressure values in the system. During this time ⓘ may illuminate.

If ⓘ illuminates at lower temperatures and extinguishes after some driving, this could be an indicator for approaching a low tyre pressure condition. Check tyre pressure of all four tyres.

If the tyre pressure must be reduced or increased, switch off ignition.

Only mount wheels with pressure sensors, otherwise ⓘ flashes for several seconds then illuminates continuously together with control indicator 🔧 ⇨ 88 and a corresponding message appears in the DIC.

A spare wheel or temporary spare wheel is not equipped with pressure sensors. TPMS is not operational for these wheels. For the further three wheels, TPMS remains operational.

Control indicator ⓘ and the corresponding message appears at each ignition cycle until the tyres are inflated to the correct tyre pressure.

Driver Information Centre (DIC) ⇨ 92.

Vehicle messages ⇨ 93.

Puncture

A puncture or severely under-inflated tyre is indicated by illumination of control indicator (!) together with STOP ⇨ 88 and a corresponding message appears in the DIC. Stop vehicle and switch off engine.

Tyre pressure ⇨ 201, Tyre repair kit ⇨ 171, Spare wheel ⇨ 175, Wheel changing ⇨ 173.

Relearn function

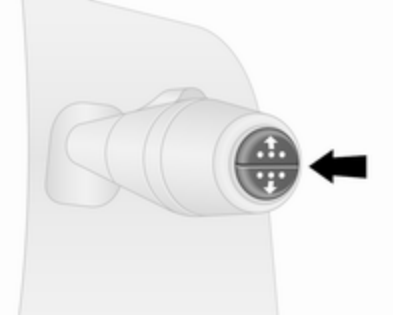

After a puncture has been repaired and the driver has inflated the tyres to the correct tyre pressure, TPMS needs to recalculate.

Tyre pressure ⇨ 201, Tyre repair kit ⇨ 171.

During driving, select the tyre pressure menu in the DIC by pressing button on end of wiper lever. Press and hold button for approx. 5 seconds to initialise recalculation. A corresponding message appears in the DIC.

Several minutes of driving at a speed above 40 km/h may be required to complete the relearn process. The system can only provide limited information during this time.

If problems occur during the relearn process, control indicator (!) remains illuminated and a warning message is displayed in the DIC.

Driver Information Centre (DIC) ⇨ 92.

Vehicle messages ⇨ 93.

General information

The use of tyre chains or commercially available liquid tyre repair kits can impair the function of the system. Factory-approved tyre repair kits can be used.

Tyre repair kit ⇨ 171, Tyre chains ⇨ 170.

External high-power radio equipment could disrupt the tyre pressure monitoring system.

Each time the tyres are replaced, TPMS sensors must be dismounted and serviced by a workshop.

Tread depth

Check tread depth at regular intervals.

Tyres should be replaced for safety reasons at a tread depth of 2-3 mm (4 mm for winter tyres).

For safety reasons it is recommended that the tread depth of the tyres on one axle should not vary by more than 2 mm.

The legally permissible minimum tread depth (1.6 mm) has been reached when the tread has worn down as far as one of the tread wear indicators (TWI). Their position is indicated by markings on the sidewall.

Tyres age, even if they are not used. We recommend tyre replacement every 6 years.

Changing tyre and wheel size

If tyres of a different size than those fitted at the factory are used, it may be necessary to reprogramme the speedometer as well as the nominal tyre pressure and make other vehicle modifications.

After converting to a different tyre size, have the label with tyre pressures replaced.

⚠ Warning

Use of unsuitable tyres or wheels may lead to accidents and will invalidate the vehicle type approval.

Wheel covers

Wheel covers and tyres that are factory approved for the respective vehicle and comply with all of the relevant wheel and tyre combination requirements must be used.

If the wheel covers and tyres used are not factory approved, the tyres must not have a rim protection ridge.

Wheel covers must not impair brake cooling.

⚠ Warning

Use of unsuitable tyres or wheel covers could lead to sudden pressure loss and thereby accidents.

Tyre chains

Tyre chains are only permitted on the front wheels.

Always use fine mesh chains that add no more than 15 mm to the tyre tread and the inboard sides (including chain lock).

For tyre size 215/60 R17, consult a workshop.

⚠Warning
Damage may lead to tyre blowout.

Wheel covers on steel wheels may come into contact with parts of the chains. In such cases, remove the wheel covers.

Tyre chains may only be used at speeds up to 50 km/h and, when travelling on roads that are free of snow, they may only be used for brief periods since they are subject to rapid wear on a hard road and may snap.

The use of tyre chains is not permitted on the temporary spare wheel.

Tyre repair kit

Minor damage to the tyre tread or sidewall can be repaired with the tyre repair kit.

Do not remove foreign bodies from the tyres.

Tyre damage exceeding 4 mm or that is at tyre sidewall near the rim cannot be repaired with the tyre repair kit.

⚠Warning
Do not drive faster than 80 km/h. Do not use for a lengthy period. Steering and handling may be affected.

If the vehicle has a flat tyre:

Apply the parking brake and engage first gear or reverse gear.

The tyre repair kit is located under the driver's seat. Vehicle tools ⇨ 165.

1. Remove the compressor and sealant bottle from the tyre repair kit case.
2. Remove the electrical connection cable and air hose from the compartments on the underside of the compressor.

3. Screw the air hose to the connection on the sealant bottle.
4. Fit the sealant bottle into the retainer on the compressor.

   Set the compressor near the tyre in such a way that the sealant bottle is upright.
5. Unscrew valve cap from defective tyre.

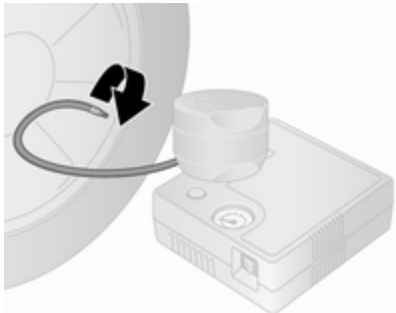

6. Screw the filler hose to the tyre valve.
7. The switch on the compressor must be set to **O**.
8. Connect the electrical connection cable to the power outlet or cigarette lighter socket.

   To avoid discharging the vehicle battery, we recommend running the engine.

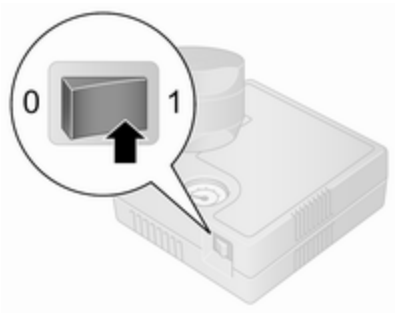

9. Set the rocker switch on the compressor to **I**. The tyre is filled with sealant.
10. The compressor pressure gauge briefly indicates up to 6 bar (600 kPa/87 psi). Then the pressure starts to drop.
11. All of the sealant is pumped into the tyre. Then the tyre is inflated.

12. The prescribed tyre pressure should be obtained within 15 minutes. Tyre pressure ⇨ 201. When the correct pressure is obtained, switch off the compressor.

    If the prescribed tyre pressure is not obtained within 15 minutes, remove the tyre repair kit. Move the vehicle one tyre rotation (approx. 2 metres). Reattach the tyre repair kit and continue the filling procedure for 15 minutes. If the prescribed tyre pressure is still not obtained, the tyre is too badly damaged. Seek the assistance of a workshop.

Drain excess tyre pressure with the button beside the pressure indicator.

Do not run the compressor for longer than 15 minutes.

13. Detach the tyre repair kit.
14. Remove any excess sealant using a cloth.
15. Take the label indicating maximum permitted speed from the tyre repair kit and affix in the driver's field of view.
16. Store the sealant bottle in the plastic bag. Return tyre repair kit to case and stow under the driver's seat.

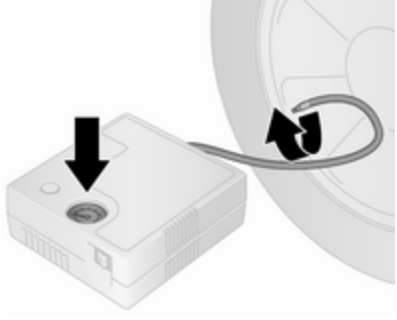

17. Continue driving immediately so that the sealant is evenly distributed throughout the tyre. After driving approx. 10 km, but no more than 10 minutes, stop and check tyre pressure using the compressor. Screw air hose from compressor directly onto tyre valve when doing this.
18. If the tyre pressure is more than 2.2 bar (220 kPa/31 psi), set it to the correct value. Repeat the procedure until there is no more loss of pressure.

    If the tyre pressure has fallen below 2.2 bar (220 kPa/31 psi), the vehicle must not be driven. Seek the assistance of a workshop.
19. Detach the tyre repair kit, return to case and stow under the driver's seat.

⚠ Warning

Do not allow the sealant to contact skin, eyes or clothing. If swallowed seek medical assistance immediately.

Note

The driving characteristics of the repaired tyre is severely affected, therefore have this tyre replaced.

If unusual noise is heard or the compressor becomes hot, turn compressor off for at least 30 minutes.

Pay attention to storage information and expiry date on sealant bottle. Its sealing capability is not guaranteed after this time.

Replace the used sealant bottle. Dispose of the sealant bottle as prescribed by applicable laws.

Wheel changing

Some vehicles are equipped with a tyre repair kit instead of a spare wheel ⇨ 171.

Make the following preparations and observe the following information:

- Park the vehicle on a level, firm and non-slippery surface. The front wheels must be in the straight-ahead position.
- Apply the parking brake and engage first gear or reverse gear.

- Remove the spare wheel ⇨ 175.
- Never change more than one wheel at a time.
- Use the jack only to change wheels in case of puncture, not for a seasonal winter or summer tyre change.
- If the ground on which the vehicle is standing is soft, a solid board (max. 1 cm thick) should be placed under the jack.
- Take heavy objects out of the vehicle before jacking up.
- No people or animals may be in the vehicle when it is jacked-up.
- Never crawl under a jacked-up vehicle.
- Do not start the engine when the vehicle is raised on the jack.
- Clean wheel bolts/nuts and thread with a clean cloth before mounting the wheel.

⚠ Warning

Do not grease wheel bolt, wheel nut and wheel nut cone.

1. Remove the wheel cover (using the hook supplied). Vehicle tools ⇨ 165.

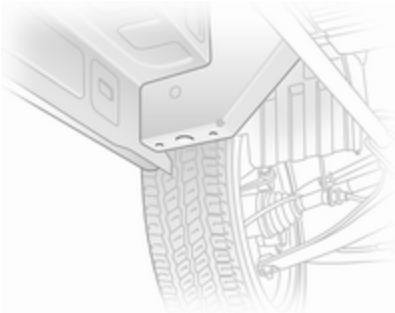

2. Loosen each of the wheel bolts by half a turn using the wheel wrench. Ensure the wrench locates securely. The wrench should turn anticlockwise to loosen the bolts. Invert the wrench if necessary.

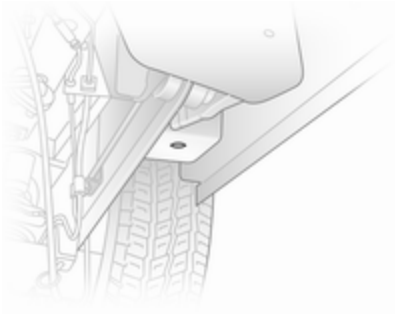

3. Place lifting pad spigot of the jack under the jacking hole located nearest the wheel concerned.

   Ensure the jack is positioned correctly. The jack base must be on the ground directly below the jacking hole in a manner that prevents it from slipping.
4. Install wrench onto the jack and raise the vehicle by turning the wrench until the wheel is clear of the ground.
5. Unscrew wheel bolts completely by turning anticlockwise and wipe clean with a cloth.

Put wheel bolts somewhere where the threads will not be soiled.

6. Change the wheel. Spare wheel ⇨ 175.
7. Screw in the wheel bolts.
8. Lower the vehicle and remove jack.
9. Tighten each of the wheel bolts in a crosswise sequence using the wheel wrench. Ensure the wrench locates securely. The wrench should turn clockwise to tighten the bolts. Invert the wrench if necessary.

   Tightening torque is 160 Nm.
10. Replace the wheel cover, ensuring that the valve hole in the wheel cover is aligned with the tyre valve before installing.

Note
If applicable, fit anti-theft bolts nearest the tyre valve (otherwise it may not be possible to refit the wheel cover).

11. Stow the replaced wheel ⇨ 175 and the vehicle tools ⇨ 165.
12. Have the new wheel balanced on the vehicle.

    Check the tyre pressure of the installed tyre ⇨ 201.

    Check the wheel bolt torque.

Have the defective tyre renewed or repaired as soon as possible.

Spare wheel

Some vehicles are equipped with a tyre repair kit instead of a spare wheel ⇨ 171.

If mounting a spare wheel which is different from the other wheels, this wheel might be classified as a temporary spare wheel and the corresponding speed limits apply, even though no label indicates this. Seek the assistance of a workshop to check the applicable speed limit.

Caution

The use of a spare wheel that is smaller than the other wheels or in combination with winter tyres could affect driveability. Have the defective tyre replaced as soon as possible.

It may be necessary to jack the vehicle up to gain access to the spare wheel on a fully loaded vehicle with a flat rear tyre.

Wheel changing ⇨ 173.

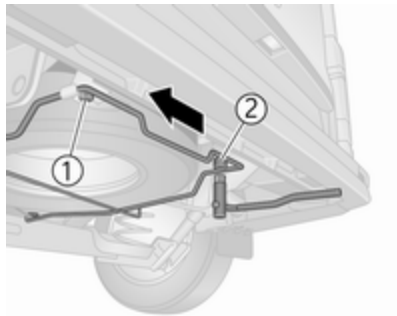

The spare wheel is mounted under the rear underbody and may be secured using a security bolt that can only be removed using the wheel bolt sleeve supplied. Vehicle tools ⇨ 165.

⚠Warning

Due to the weight of the tyre assembly, exercise caution when releasing the spare wheel carrier. Do not fully remove bolt **1**.

Support the spare wheel with a suitable object to prevent the wheel falling suddenly when loosening the carrier bolts - risk of injury!

To release the spare wheel carrier, loosen bolt **1**, ensuring it is not fully removed. Fully remove bolt **2**, then pull the carrier to the left, until it clears bolt **1**, and lower the carrier assembly.

When installing the wheel ensure that the spare wheel carrier is correctly positioned before tightening the bolts.

Summer and winter tyres

If you use winter tyres, the spare wheel may still be fitted with a summer tyre.

If you use the spare wheel when it is fitted with a summer tyre the vehicle's driveability may be affected, especially on slippery road surfaces.

Directional tyres

Fit directional tyres such that they roll in the direction of travel. The rolling direction is indicated by a symbol (e.g. an arrow) on the sidewall.

The following applies to tyres fitted opposing the rolling direction:

- Driveability may be affected. Have the defective tyre renewed or repaired as soon as possible and fit it instead of the spare wheel.
- Do not drive faster than 80 km/h.
- Drive particularly carefully on wet and snow-covered road surfaces.

Jump starting

Do not start with a quick charger.

A vehicle with a discharged battery can be started using jump leads and the vehicle battery of another vehicle.

⚠Warning

Be extremely careful when starting with jump leads. Any deviation from the following instructions can lead to injuries or damage caused by battery explosion or damage to the electrical systems of both vehicles.

⚠Warning

Avoid contact of the battery with eyes, skin, fabrics and painted surfaces. The fluid contains sulphuric acid which can cause injuries and damage in the event of direct contact.

- Never expose the battery to naked flames or sparks.

- A discharged vehicle battery can already freeze at a temperature of 0 °C. Defrost the frozen battery before connecting jump leads.
- Wear eye protection and protective clothing when handling a battery.
- Use a booster battery with the same voltage (12 volts). Its capacity (Ah) must not be much less than that of the discharged battery.
- Use jump leads with insulated terminals and a cross section of at least 16 mm^2 (25 mm^2 for diesel engines).
- Do not disconnect the discharged vehicle battery from the vehicle.
- Switch off all unnecessary electrical consumers.
- Do not lean over the battery during jump starting.
- Do not allow the terminals of one lead to touch those of the other lead.
- The vehicles must not come into contact with each other during the jump starting process.
- Apply the parking brake, transmission in neutral.
- Open the positive terminal protection caps of both batteries.

The battery is located in the engine compartment.

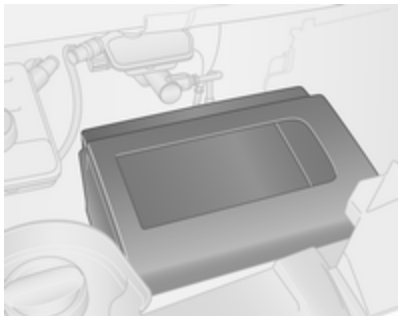

Remove cover to access the battery.

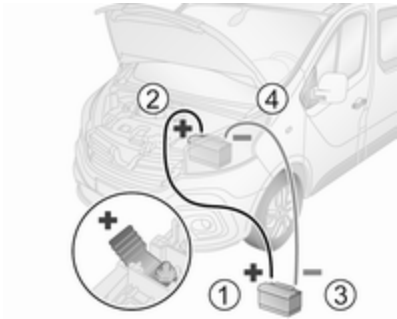

Lead connection order:

1. Connect the red lead to the positive terminal (1) of the booster battery.
2. Connect the other end of the red lead to the positive terminal (2) of the discharged battery.
3. Connect the black lead to the negative terminal (3) of the booster battery.
4. Connect the other end of the black lead to a vehicle grounding point (4), such as the engine block or an engine mounting bolt. Connect as

far away from the discharged vehicle battery as possible, however at least 60 cm.

Route the leads so that they cannot catch on rotating parts in the engine compartment.

To start the engine:

1. Start the engine of the vehicle providing the jump start.
2. After 5 minutes, start the other engine. Start attempts should be made for no longer than 15 seconds at an interval of 1 minute.
3. Allow both engines to idle for approx. 3 minutes with the leads connected.
4. Switch on electrical consumers (e.g. headlights, heated rear window) of the vehicle receiving the jump start.
5. Reverse above sequence exactly when removing leads.

Towing

Towing the vehicle

The towing eye is stowed with the vehicle tools ⇨ 165.

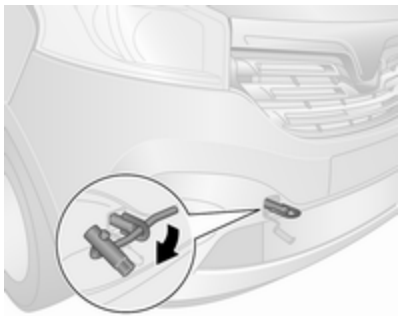

Release cap using a suitable tool.

Screw the towing eye clockwise into the front towing point and tighten fully using the wheel wrench.

Attach a tow rope - or better still a tow rod - to the towing eye, never to the bumper or front suspension units.

Caution

Do not tow the vehicle from the rear. The front towing eye must only be used for towing and not recovering a vehicle.

Caution

Activate the child locks in the rear doors if the rear seats are occupied. Child locks ⇨ 30.

Switch on ignition to permit operation of brake lights, horn and windscreen wipers, and move the steering wheel slightly to release the steering wheel lock.

Transmission in neutral.

Caution

Drive slowly. Do not drive jerkily. Excessive tractive force can damage the vehicle.

When the engine is not running, considerably more force is needed to brake and steer.

To prevent the entry of exhaust fumes from the towing vehicle, switch on the air recirculation system ⇨ 106 and close the windows.

Seek the assistance of a workshop.

After towing, unscrew the towing eye and replace cap.

Towing another vehicle

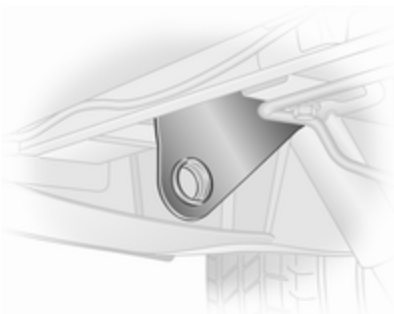

The fixed towing eye is located under the rear bumper.

Attach a tow rope - or better still a tow rod - to the rear towing eye, never to the rear axle and suspension units.

The rear towing eye must only be used for towing and not recovering a vehicle.

Caution
Drive slowly. Do not drive jerkily. Excessive tractive force can damage the vehicle.

Trailer hitch ⇨ 144.

Appearance care

Exterior care

Locks

The locks are lubricated at the factory using a high quality lock cylinder grease. Use de-icing agent only when absolutely necessary, as this has a degreasing effect and impairs lock function. After using a de-icing agent, have the locks regreased by a workshop.

Washing

The paintwork of your vehicle is exposed to environmental influences. Wash and wax your vehicle regularly. When using automatic vehicle washes, select a programme that includes waxing. Restrictions for filmed or matt painted body parts or decor tapes, see "Polishing and waxing".

Bird droppings, dead insects, resin, pollen and the like should be cleaned off immediately, as they contain aggressive constituents which can cause paint damage.

If using a vehicle wash, comply with the vehicle wash manufacturer's instructions. The windscreen wipers and rear window wiper must be switched off and the exterior mirrors must be folded in. Remove antenna and external accessories such as roof racks etc.

If you wash your vehicle by hand, make sure that the insides of the wheel housings are also thoroughly rinsed out.

Clean edges and folds on opened doors and the bonnet as well as the areas they cover.

Caution
Always use a cleaning agent with a pH value of 4 to 9. Do not use cleaning agents on hot surfaces.

Have the door hinges of all doors greased by a workshop.

Do not clean the engine compartment with a steam-jet or high-pressure jet cleaner.

Thoroughly rinse and leather-off the vehicle. Rinse leather frequently. Use separate leathers for painted and glass surfaces: remnants of wax on the windows will impair vision.

Do not use hard objects to remove spots of tar. Use tar removal spray on painted surfaces.

Exterior lights

Headlight and other light covers are made of plastic. Do not use any abrasive or caustic agents, do not use an ice scraper, and do not clean them dry.

Polishing and waxing

Wax the vehicle regularly (at the latest when water no longer beads). Otherwise, the paintwork will dry out.

Polishing is necessary only if the paint has become dull or if solid deposits have become attached to it.

Paintwork polish with silicone forms a protective film, making waxing unnecessary.

Unpainted plastic body parts must not be treated with wax or polishing agents.

Matt filmed body parts or decor tapes must not be polished, to avoid gleaming. Do not use hot wax programmes in automatic car washes if the vehicle is equipped with these parts.

Matt painted decor parts, e.g. mirror housing cover, must not be polished. Otherwise these parts would become agleam or the colour would be dissolved.

Windows and windscreen wiper blades

Use a soft lint-free cloth or chamois leather together with window cleaner and insect remover.

When cleaning the rear window from inside, always wipe in parallel to the heating element to prevent damage.

For mechanical removal of ice, use a sharp-edged ice scraper. Press the scraper firmly against the glass so that no dirt can get under it and scratch the glass.

Remove dirt residues from smearing wiper blades by using a soft cloth and window cleaner. Also make sure to remove any residues such as wax, insect residues and similar from the window.

Ice residues, pollution and continuous wiping on dry windows will damage or even destroy the wiper blades.

Wheels and tyres

Do not use high-pressure jet cleaners.

Clean rims with a pH-neutral wheel cleaner.

Rims are painted and can be treated with the same agents as the body.

Paintwork damage

Rectify minor paintwork damage with a touch-up pen before rust forms. Have more extensive damage or rust areas repaired by a workshop.

Underbody

Some areas of the vehicle underbody have a PVC undercoating while other critical areas have a durable protective wax coating.

After the underbody is washed, check the underbody and have it waxed if necessary.

Bitumen/rubber materials could damage the PVC coating. Have underbody work carried out by a workshop.

Before and after winter, wash the underbody and have the protective wax coating checked.

Towing equipment

Do not clean the coupling ball bar with a steam-jet or high-pressure jet cleaner.

Interior care

Interior and upholstery

Only clean the vehicle interior, including the instrument panel fascia and panelling, with a dry cloth or interior cleaner.

Clean any leather upholstery with clear water and a soft cloth. In case of heavy soiling, use leather care.

The instrument cluster and the displays should only be cleaned using a soft damp cloth. If necessary use a weak soap solution.

Clean fabric upholstery with a vacuum cleaner and brush. Remove stains with an upholstery cleaner.

Clothing fabrics may not be colourfast. This could cause visible discolourations, especially on light-coloured upholstery. Removable stains and discolourations should be cleaned as soon as possible.

Clean seat belts with lukewarm water or interior cleaner.

Caution

Close Velcro fasteners as open Velcro fasteners on clothing could damage seat upholstery.

The same applies to clothing with sharp-edged objects, like zips or belts or studded jeans.

Plastic and rubber parts

Plastic and rubber parts can be cleaned with the same cleaner as used to clean the body. Use interior cleaner if necessary. Do not use any other agent. Avoid solvents and petrol in particular. Do not use high-pressure jet cleaners.

Service and maintenance

General information **183**
Service information 183
Recommended fluids, lubricants and parts **185**
Recommended fluids and lubricants 185

General information

Service information

In order to ensure economical and safe vehicle operation and to maintain the value of your vehicle, it is of vital importance that all maintenance work is carried out at the proper intervals as specified.

The detailed, up-to-date service schedule for the vehicle is available at the workshop.

Service display ⇨ 83.

Engine identification ⇨ 188.

European service intervals

Maintenance of your vehicle is required every 40,000 km or after 2 years, whichever occurs first, unless otherwise indicated by the service display.

A shorter service interval can be valid for severe driving behaviour, e.g. for taxis and police vehicles.

The European service intervals are valid for the following countries: Andorra, Austria, Belgium, Croatia, Czech Republic, Denmark, Estonia, Finland, France, Germany, Greece, Hungary, Iceland, Ireland, Italy, Latvia, Liechtenstein, Lithuania, Luxembourg, Netherlands, Norway, Poland, Portugal, Slovakia, Slovenia, Spain, Sweden, Switzerland, United Kingdom.

International service intervals

Israel:
Maintenance of your vehicle is required every 40,000 km or after 1 year, whichever occurs first, unless otherwise indicated by the service display.

Albania, Bosnia-Herzegovina, Kosovo, Macedonia, Montenegro, Serbia:
Maintenance of your vehicle is required every 30,000 km or after 2 years, whichever occurs first, unless otherwise indicated by the service display.

Romania, Bulgaria, Moldova, Cyprus:
Maintenance of your vehicle is required every 30,000 km or after 1 year, whichever occurs first, unless otherwise indicated by the service display.

Australia, New Zealand:
Maintenance of your vehicle is required every 30,000 km or after 2 years, whichever occurs first, unless otherwise indicated by the service display.

Turkey:
Maintenance of your vehicle is required every 20,000 km or after 1 year, whichever occurs first, unless otherwise indicated by the service display.

Morocco:
Maintenance of your vehicle is required every 15,000 km or after 1 year, whichever occurs first, unless otherwise indicated by the service display.

South Africa:
Maintenance of your vehicle is required every 15,000 km or after 1 year, whichever occurs first, unless otherwise indicated by the service display.

Russia, Ukraine, Belarus, Kazakhstan:
Maintenance of your vehicle is required every 15,000 km or after 1 year, whichever occurs first, unless otherwise indicated by the service display.

Algeria, Tunisia:
Maintenance of your vehicle is required every 10,000 km or after 1 year, whichever occurs first, unless otherwise indicated by the service display.

International:
Maintenance of your vehicle is required every 10,000 km or after 1 year, whichever occurs first, unless otherwise indicated by the service display.

International countries include:

Malta, Singapore.

International+:
Maintenance of your vehicle is required every 8,000 km or after 1 year, whichever occurs first, unless otherwise indicated by the service display.

International **+** countries include: To be defined.

International++:
Maintenance of your vehicle is required every 5,000 km or after 6 months, whichever occurs first, unless otherwise indicated by the service display.

International **++** countries include: Hong Kong.

Confirmations

Confirmation of service is recorded in the Service and warranty booklet. The date and mileage is completed with the stamp and signature of the servicing workshop.

Make sure that the Service and warranty booklet is completed correctly as continuous proof of service is essential if any warranty or

goodwill claims are to be met, and is also a benefit when selling the vehicle.

Service display

The service interval is based on several parameters depending on usage.

The service display, located in the Driver Information Centre (DIC), indicates when the next service is due. Seek the assistance of a workshop.

Service display ⇨ 83.

Recommended fluids, lubricants and parts

Recommended fluids and lubricants

Only use products that meet the recommended specifications.

⚠ Warning

Operating materials are hazardous and could be poisonous. Handle with care. Pay attention to information given on the containers.

Engine oil

Engine oil is identified by its quality and its viscosity. Quality is more important than viscosity when selecting which engine oil to use. The oil quality ensures e.g. engine cleanliness, wear protection and oil aging control, whereas viscosity grade gives information on the oil's thickness over a temperature range.

Dexos is the newest engine oil quality that provides optimum protection for petrol and diesel engines. If it is unavailable, engine oils of other listed qualities must be used.

Select the appropriate engine oil based on its quality and on the minimum ambient temperature ⇨ 189.

Topping up engine oil

Engine oils of different manufacturers and brands can be mixed as long as they comply with the required engine oil quality and viscosity.

Use of engine oil with only ACEA A1/B1 or only A5/B5 quality is prohibited, since it can cause long-term engine damage under certain operating conditions.

Select the appropriate engine oil based on its quality and on the minimum ambient temperature ⇨ 189.

Additional engine oil additives

The use of additional engine oil additives could cause damage and invalidate the warranty.

Engine oil viscosity grades

The SAE viscosity grade gives information of the thickness of the oil.

Multigrade oil is indicated by two figures, e.g. SAE 5W-30. The first figure, followed by a W, indicates the low temperature viscosity and the second figure the high temperature viscosity.

Select the appropriate viscosity grade depending on the minimum ambient temperature ⇨ 189.

All of the recommended viscosity grades are suitable for high ambient temperatures.

Coolant and antifreeze

Use only silicate-free long life coolant (LLC) antifreeze approved for the vehicle. Consult a workshop.

The system is factory filled with coolant designed for excellent corrosion protection and frost protection down to approx. -28 °C. This concentration should be maintained all year round. The use of additional coolant additives that intend to give additional corrosion protection or seal against minor leaks can cause function problems. Liability for consequences resulting from the use of additional coolant additives will be rejected.

Brake fluid

Over time, brake fluid absorbs moisture which will reduce braking effectiveness. The brake fluid should therefore be replaced at the specified interval.

AdBlue

Only use AdBlue to reduce the nitrogen oxides in the exhaust emission ⇨ 125.

Technical data

Vehicle identification **187**
Vehicle Identification Number .. 187
Identification plate 188
Engine identification 188
Vehicle data **189**
Recommended fluids and lubricants 189
Engine data 190
Vehicle weight 192
Vehicle dimensions 195
Capacities 200
Tyre pressures 201

Vehicle identification

Vehicle Identification Number

The Vehicle Identification Number is visible through the windscreen.

The VIN is also displayed behind a removable plastic cover on the right-hand side door step.

Identification plate

The identification plate is located on the right-hand door pillar.

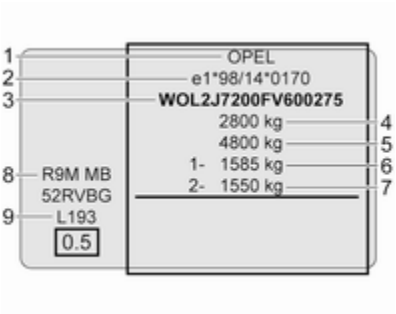

Information on identification plate:

1 : Manufacturer
2 : Type approval number
3 : Vehicle Identification Number
4 : Permissible gross vehicle weight rating in kg
5 : Permissible gross combination weight in kg
6 : Maximum permissible front axle load in kg
7 : Maximum permissible rear axle load in kg
8 : Engine coding
9 : Vehicle-specific or country specific data

Note
The VIN plate on your vehicle may differ from the illustration shown.

The combined total of front and rear axle loads must not exceed the permissible gross vehicle weight. For example, if the front axle is bearing its maximum permissible load, the rear axle can only bear a load that is equal to the gross vehicle weight minus the front axle load.

The technical data is determined in accordance with European Community standards. We reserve the right to make modifications. Specifications in the vehicle documents always have priority over those given in this manual.

Engine identification

The technical data tables show the engine identifier code. Engine data ⇨ 190.

To identify the respective engine, refer to the engine power in the EEC Certificate of Conformity provided with your vehicle or other national registration documents.

It is also possible, using the Vehicle Identification Number (VIN), to determine the engine type that is installed in your vehicle. For further information consult a workshop.

Vehicle data

Recommended fluids and lubricants

Required engine oil quality

Engine oil quality: Europe	
dexos 2	✓

For countries with International service interval ⇨ 183, you may use the oil qualities listed below:

Engine oil quality: International	
dexos 2	✓
GM-LL-A/B-025	✓
ACEA C3 diesel engines with DPF	✓
ACEA A3/B4 diesel engines without DPF	✓

Engine oil viscosity grades

Ambient temperature	
down to -25 °C	SAE 5W-30 or SAE 5W-40
below -25 °C	SAE 0W-30 or SAE 0W-40

Engine data

Sales designation	1.6 CDTi BiTurbo 120[1]	1.6 CDTi 90[2]	1.6 CDTi 115[2]	1.6 CDTi BiTurbo 120[2]	1.6 CDTi BiTurbo 140[2]
Engine identifier code	**R9M 450**	**R9M 408**	**R9M 408**	**R9M 450**	**R9M 450**
Number of cylinders	4	4	4	4	4
Piston displacement [cm^3]	1598	1598	1598	1598	1598
Engine power [kW] (PS)	88 (120)	66 (90)	85 (115)	88 (120)	103 (140)
at rpm	3500	3500	3500	3500	3500
Torque [Nm]	320	260	300	320	340
at rpm	1500	1500	1750	1500	1750
Fuel type	Diesel	Diesel	Diesel	Diesel	Diesel

1) Euro 4.
2) Euro 5.

Sales designation	1.6 CDTi 95[3)]	1.6 CDTi 115[3)]	1.6 CDTi BiTurbo 125[3)]	1.6 CDTi BiTurbo 145[3)]
Engine identifier code	R9M 413	R9M 413	R9M 452	R9M 452
Number of cylinders	4	4	4	4
Piston displacement [cm^3]	1598	1598	1598	1598
Engine power [kW] (PS)	70 (95)	85 (115)	92 (125)	107 (145)
at rpm	3500	3500	3500	3500
Torque [Nm]	260	300	320	340
at rpm	1500	1500	1500	1500
Fuel type	Diesel	Diesel	Diesel	Diesel

3) Euro 6 with Adblue.

Adblue ⇨ 125.

Vehicle weight

Kerb weight, basic model

Optional equipment and accessories increase the kerb weight.

Loading information ⇨ 75.

Model	Engine	Wheelbase	Roof	Payload Class	Gross Vehicle Weight rating	Kerb weight[4)5)]
Van	R9M	L1	H1	1000	2700	1661
				1200	2900	1661
			H2	1200	2900	1760-1771
		L2	H1	1200	2900	1691-1695
			H2	1200	2900	1775

4) Kerb weight and gross vehicle weight increase on models fitted with bad road equipment package - refer to VIN plate.

5) Minimum vehicle weight according to Type Approval, including all fluids, vehicle tools and a 90% fuel load. Excludes the weight of the driver and deletable options, e.g. spare wheel, bulkhead and sliding side load door. Final weight may vary according to the specification of the vehicle, e.g. options, deleted options and accessories.

Model	Engine	Wheelbase	Roof	Payload Class	Gross Vehicle Weight rating	Kerb weight[4)5)]
Combi	R9M	L1	H1	1000	2700	1901
				1200	2900	1901
		L2	H1	1200	2900	1901

4) Kerb weight and gross vehicle weight increase on models fitted with bad road equipment package - refer to VIN plate.
5) Minimum vehicle weight according to Type Approval, including all fluids, vehicle tools and a 90% fuel load. Excludes the weight of the driver and deletable options, e.g. spare wheel, bulkhead and sliding side load door. Final weight may vary according to the specification of the vehicle, e.g. options, deleted options and accessories.

Model	Engine	Wheelbase	Roof	Payload Class	Gross Vehicle Weight rating	Kerb weight[4)5)]
Platform cab	R9M	L2	H1	1200	2900	1550

4) Kerb weight and gross vehicle weight increase on models fitted with bad road equipment package - refer to VIN plate.
5) Minimum vehicle weight according to Type Approval, including all fluids, vehicle tools and a 90% fuel load. Excludes the weight of the driver and deletable options, e.g. spare wheel, bulkhead and sliding side load door. Final weight may vary according to the specification of the vehicle, e.g. options, deleted options and accessories.

				Additional minimum weights (approx.)[6]		
Model	Engine	Wheelbase	Trim level	Front axle	Rear axle	Total
Double cab	R9M	L1	Base	24	61	85
			Mid	27	69	96
			Upper	32	78	110
		L2	Base	31	54	85
			Mid	35	61	96
			Upper	41	69	110

6) Final weight may vary according to the specification of the vehicle, e.g. options, deleted options and accessories. Refer to identification plate on the right-hand door pillar.

Vehicle dimensions

Type	Van		Combi		Double cab		Platform cab
Wheelbase	**L1**	**L2**	**L1**	**L2**	**L1**	**L2**	**L2**
Length [mm]	4999	5399	4999	5399	4999	5399	5399
Width without exterior mirrors [mm]	1956	1956	1956	1956	1956	1956	1956
Width with two exterior mirrors [mm]	2283	2283	2283	2283	2283	2283	2185
Height - unladen (without antenna) [mm]							
H1	1971	1971	1971	1971	1971	1971	2700
H2	2465	2465	-	-	-	-	-
Wheelbase [mm]	3098	3498	3098	3498	3098	3498	3498
Track width [mm]							
Front	1615	1615	1615	1615	1615	1615	1615
Rear	1628[7)]	1628[7)]	1628	1628	1628	1628	1628

7) 1630 with H2 Roof height.

Loadspace dimensions

	Van			
Wheelbase	**L1**		**L2**	
Roof height	**H1**	**H2**	**H1**	**H2**
Maximum rear door aperture height [mm]	1320	1820	1320	1820
Rear door aperture width (at floor) [mm]	1391	1391	1391	1391
Maximum load area height [mm]	1387	1898	1387	1898
Maximum load area width [mm]	1662	1662	1662	1662
Width between wheel arches [mm]	1268	1268	1268	1268
Maximum load floor length [mm]	2537	2537	2937	2937
Maximum load floor length - up to front passenger seat [mm][8)]	2950	2950	3350	3350
Maximum load floor length - up to front passenger footwell [mm][8)]	3815	3815	4150	4150
Loading height unladen [mm]	552	527	552	525
Sliding side door aperture width [mm]	1229	1229	1229	1229

	Van			
Wheelbase	**L1**		**L2**	
Roof height	**H1**	**H2**	**H1**	**H2**
Sliding side door aperture width - at 100 mm from floor [mm]	1030	1030	1030	1030
Sliding side door aperture height [mm]	1284	1284	1284	1284

8) With load-through feature.

	Combi	
Wheelbase	**L1**	**L2**
Roof height	**H1**	**H1**
Maximum rear door aperture height [mm]	1295	1295
Rear door aperture width (at floor) [mm]	1391	1391
Maximum load area height [mm]	1369	1369
Maximum load area width [mm]	1662	1662
Width between wheel arches [mm]	1268	1268
Maximum load floor length [mm]	736/1650[9)]	1136/2050[9)]
Loading height unladen [mm]	552	552
Sliding side door aperture width [mm]	1229	1229

	Combi	
Wheelbase	**L1**	**L2**
Roof height	**H1**	**H1**
Sliding side door aperture width - at 100 mm from floor [mm]	1030	1030
Sliding side door aperture height [mm]	1284	1284

9) Depending on number of seats.

	Double cab	
Wheelbase	**L1**	**L2**
Roof height	**H1**	**H1**
Maximum rear door aperture height [mm]	1320	1320
Rear door aperture width (at floor) [mm]	1391	1391
Maximum load area height [mm]	1387	1387
Maximum load area width [mm]	1662	1662
Width between wheel arches [mm]	1268	1268
Maximum load floor length [mm]	2023	2423
Maximum load floor length - behind rear seats [mm]	1340	1740
Loading height unladen [mm]	552	552
Sliding side door aperture width [mm]	1229	1229

	Double cab	
Wheelbase	**L1**	**L2**
Roof height	**H1**	**H1**
Sliding side door aperture width - at 100 mm from floor [mm]	1030	1030
Sliding side door aperture height [mm]	1284	1284

Capacities

Engine oil

Engine	R9M 408	R9M 450, R9M 413, R9M 452
Engine oil including filter [l] (approx.)	6.0	7.4
between MIN and MAX [l] (approx.)	2.1	3.5

Fuel tank

Fuel tank, nominal capacity [l]	80

AdBlue tank

AdBlue, nominal capacity [l]	22.5

Tyre pressures

Tyre	Tyre pressure with full load[10]	
	Front [kPa/bar] (psi)	Rear [kPa/bar] (psi)
205/65 R16 C	380/3.8 (55)	420/4.2 (61)
215/65 R16 C	310/3.1 (45)	340/3.4 (49)
195/75 R16 C	380/3.8 (55)	420/4.2 (61)
215/60 R17 C	350/3.5 (51)[11]	390/3.9 (57)[12]

[10] The spare wheel should be set to the highest applicable pressure shown in the table.
[11] Combi: 320/3.2 (46) for non-motorway driving below 160 km/h.
[12] Combi: 350/3.5 (51) for non-motorway driving below 160 km/h.

The tyre pressure information label on the driver's door frame indicates the original equipment tyres and the correspondent tyre pressures. Always inflate tyres to the pressures shown on the label.

Tyre pressure information label ⇨ 166.

Customer information

Customer information **202**
Declaration of conformity 202
Vehicle data recording and privacy **204**
Event data recorders 204
Radio Frequency Identification (RFID) 204

Customer information

Declaration of conformity

Transmission systems

This vehicle has systems that transmit and/or receive radio waves subject to Directive 1999/5/EC. These systems are in compliance with the essential requirements and other relevant provisions of Directive 1999/5/EC. Copies of the original Declarations of Conformity can be obtained on our website.

Radar systems

Country-specific Declarations of Conformity for radar systems are shown on the following page:

European Union
EC Directive: 1999/5/EC
Manufacturer: Delphi Electronics & Safety
Model / Type Designation: L2C0038TR
Description / Intended Use:
Electronically Scanned Radar (ESR),
a 76.5GHz adaptive cruise control system radar fitted to motor vehicles at vehicle manufacture
Applied Standards:
47 CFR Part 15
CEPT ERC Recommendation 70-03
EN 60950
EN 301 091
European Commission Directive 2006/28/EC
I declare that the product referenced above is in compliance with the essential requirements and other relevant provisions of Directive 1999/5/EC, on the approximation of the laws of the member states relating to Directive 1999/5/EC.

Brazil

Este equipamento opera em caráter secundário, isto é, não tem direito a proteção contra interferência prejudicial, mesmo de estações do mesmo tipo, e não pode causar interferência a sistemas operando em caráter primário

Indonesia
14785/POSTEL/2010
1982

Jordan
Type Approval No.: TRC/LPD/2009/87
Equipment Type: Low Power Device (LPD)

Malaysia

Approval #: B 05358

Moldova

8526

Morocco
AGREE PAR L'ANRT MAROC
Numéro d'agrément :
MR 4838 ANRT 2009
Date d'agrément : 22/5/2009

Singapore
Complies with
IDA Standards
DA105753

South Africa

TA-2009/163
APPROVED

South Korea

Taiwan
CCAB09LP4590T3

UAE
TRA
REGISTERED No:
0018923/09
DEALER No:
DA0047809/10

United States of America and Canada
Model / FCC ID: L2C0038TR IC: 3432A-0038TR

This device complies with Part 15 of the FCC Rules and with Industry Canada license-exempt RSS standard(s). Operation is subject to the following two conditions: (1) This device may not cause harmful interference, and (2) This device must accept any interference received, including interference that may cause undesired operation.

Le présent appareil est conforme aux CNR d'Industrie Canada applicables aux appareils radio exempts de licence. L'exploitation est autorisée aux deux conditions suivantes: (1) l'appareil ne doit pas produire de brouillage, et (2) l'utilisateur de l'appareil doit accepter tout brouillage radioélectrique subi, même si le brouillage est susceptible d'en compromettre le fonctionnement.

Note: Changes or modifications not expressively approved by the party responsible for compliance could void the user's authority to operate the equipment. The term "IC:" before the radio certification number only signifies that Industry Canada technical specifications were met.

Note: This equipment complies with radiation exposure limits set forth for an uncontrolled environment. This equipment should be installed and operated with minimum distance of 20 cm between the radiator and your body.

Vehicle data recording and privacy

Event data recorders

Data storage modules in the vehicle

A large number of electronic components of your vehicle contain data storage modules temporarily or permanently storing technical data about the condition of the vehicle, events and errors. In general, this technical information documents the condition of parts, modules, systems or the environment:

- operating conditions of system components (e.g. filling levels)
- status messages of the vehicle and its single components (e.g. number of wheel revolutions / rotational speed, deceleration, lateral acceleration)
- dysfunctions and defects in important system components
- vehicle reactions in particular driving situations (e.g. inflation of an airbag, activation of the stability regulation system)
- environmental conditions (e.g. temperature)

These data are exclusively technical and help identifying and correcting errors as well as optimising vehicle functions.

Motion profiles indicating travelled routes cannot be created with these data.

If services are used (e.g. repair works, service processes, warranty cases, quality assurance), employees of the service network (manufacturer included) are able to read out this technical information from the event and error data storage modules applying special diagnostic devices. If required, you will receive further information at these workshops. After an error has been corrected, the data are deleted from the error storage module or they are constantly overwritten.

When using the vehicle, situations may occur in which these technical data related to other information (accident report, damages on the vehicle, witness statements etc.) may be associated with a specific person - possibly, with the assistance of an expert.

Additional functions contractually agreed upon with the client (e.g. vehicle location in emergency cases) allow the transmission of particular vehicle data from the vehicle.

Radio Frequency Identification (RFID)

RFID technology is used in some vehicles for functions such as tyre pressure monitoring and ignition system security. It is also used in connection with conveniences such as radio remote controls for door locking/unlocking and starting, and in-vehicle transmitters for garage door openers. RFID technology in Opel vehicles does not use or record personal information or link with any other Opel system containing personal information.

Index

A

Absorptive Glass Mat battery..... 152
Accessories and vehicle modifications 147
Adaptive forward lighting 100
Adblue..... 95
AdBlue..... 90, 125, 185
AdBlue tank..... 200
Adjustable air vents 114
AGM battery..... 152
Airbag and belt tensioners 87
Airbag deactivation 59, 87
Airbag label..... 55, 59
Airbag system 55
Air conditioning regular operation 115
Air conditioning system 106
Air intake 115
Air recirculation..... 106, 178
Air vents..... 114
Alert..... 94
Antifreeze..... 150
Antilock brake system 131
Antilock brake system (ABS) 89
Anti-theft alarm system 36
Anti-theft bolts..... 173
Anti-theft locking system 35
Anti-theft security lock..... 25
Appearance care..... 179
Armrest 48
Ashtrays 81
Automatic anti-dazzle 41
Automatic fuel cut-off..... 121
Automatic light control 99
Automatic locking 30
Autostop..... 91, 120, 121
Auxiliary heater..... 110

B

Battery..... 152
Battery discharge protection 104
Battery, jump starting..... 176
Belts..... 51
Bench seat..... 70
BlueInjection..... 125
Bonnet 148
Bottle holders..... 70
Brake and clutch fluid..... 185
Brake assist 132
Brake fluid 152
Brakes 130, 152
Brake system 88
Breakdown..... 178
Bulb replacement 156

C

Capacities 200
Car Pass 21
Catalytic converter 125
Central locking system 25
Centre high-mounted brake light 158

Changing tyre and wheel size ... 170
Charging system ... 88
Child locks ... 30
Child restraint installation locations ... 62
Child restraints ... 61
Child restraint systems ... 61
Cigarette lighter ... 81
Cleaning the vehicle ... 179
Climate control ... 17
Climate control systems ... 105
Clock ... 79
Coat hooks ... 69
Coin holder ... 68
Control indicators ... 84
Control of the vehicle ... 117
Controls ... 77
Controls in steering wheel ... 77
Convex shape ... 39
Coolant ... 150
Coolant and antifreeze ... 185
Coolant heater ... 110
Cooling (A/C) ... 106
Cornering light ... 100
Cruise control ... 92, 135
Cupholders ... 69
Curtain airbag system ... 59

D

Danger, Warnings and Cautions ... 4
Dashboard ... 10
Daytime running lights ... 99, 100
Declaration of conformity ... 202
DEF ... 125
Demisting and defrosting ... 17
Diesel exhaust fluid ... 125
Diesel fuel filter ... 154
Diesel fuel system bleeding ... 154
Diesel particle filter ... 124
Directional tyres ... 166, 175
Distance to service ... 83
Document tray ... 69
Door locks ... 25
Door open ... 92
Door panel storage ... 70
Doors ... 31
Double cab ... 70
DPF (diesel particle filter) ... 124
Driver assistance systems ... 135
Driver Information Centre ... 92
Driving characteristics and towing tips ... 144
Driving economically ... 116
Driving hints ... 116

E

ECO mode ... 116
ecoScoring ... 95
Electric adjustment ... 39
Electrical accessories ... 80
Electrical system ... 161
Electronic climate control system 107
Electronic data recording ... 41
Electronic key system ... 23
Electronic Stability Program 89, 133, 145
Electronic Stability Program off ... 89
End-of-life vehicle recovery ... 147
Engine air filter ... 150
Engine air flow indicator ... 150
Engine coolant ... 150
Engine coolant temperature ... 89
Engine data ... 190
Engine exhaust ... 124
Engine identification ... 188
Engine oil ... 149, 185, 189, 200
Engine oil additives ... 185
Engine oil level ... 94
Engine oil pressure ... 90
Engine oil viscosity grades ... 185
Enhanced Traction function 132, 133
Entry lighting ... 103
Event data recorders ... 204
Exhaust gases ... 124, 178
Exit lighting ... 104
Exterior care ... 179
Exterior light ... 91

Exterior lighting 14, 98
Exterior mirrors..... 39

F

Fault messages..... 93
First aid kit 74
Fixed air vents 114
Fog light 92
Fog lights..... 101, 156
Fog tail light 159
Folding centre seatback..... 69
Folding front centre passenger seat..... 47
Folding mirrors 39
Foot well lights..... 102
Front airbag system 58
Front courtesy lights..... 102
Front door pockets..... 70
Front fog lights..... 98, 101
Front seats..... 45
Front storage..... 69
Front turn signal lights 157
Fuel consumption - CO_2-Emissions 144
Fuel cut-off system..... 121
Fuel economy gauge..... 83
Fuel economy mode..... 91
Fuel economy rating..... 93, 95
Fuel for diesel engines 142
Fuel gauge 83
Fuel tank..... 200
Fuse box..... 162
Fuses 161

G

Gauges..... 81
General information 144
Glovebox 68
Glovebox cooler 114
Glove box lighting..... 103

H

Hand brake..... 130
Hand brake - see Parking brake. 131
Hazard warning flashers 100
Headlight flash 99
Headlight range adjustment 99
Headlights..... 98, 99, 156
Headlights when driving abroad 100
Head restraint adjustment 8
Head restraints 44
Heated exterior mirrors..... 17
Heated mirrors 40
Heated rear window..... 17, 43
Heating 48
Heating and ventilation system . 105
Heat-reflecting windscreen..... 41
High beam 91, 99
Hill start assist 132
Horn 16, 77

I

Identification plate 188
Idle speed control..... 120
Ignition switch positions 118
Immobiliser 38
Indicators..... 81
Info-display..... 92
Information displays..... 92
Initial drive information..... 6
Instrument cluster 81
Instrument panel fuse box 162
Instrument panel illumination 160
Instrument panel illumination control 102
Instrument panel overview 10
Instrument panel storage..... 68
Instrument panel tray..... 68
Interior care 181
Interior lighting..... 102
Interior lights 102, 160
Interior mirrors..... 40
Introduction 3
Isofix child restraint systems 67

J

Jack..... 165
Journey record..... 95
Jump starting 176

K
Keys 21
Keys, locks..... 21

L
Lashing eyes 73
Laying up the vehicle..... 147, 152
LED spotlights..... 102
Light covers, misted..... 101
Lighting..... 98
Lighting features..... 103
Light switch 98
Load compartment 33, 72
Load compartment cover 72
Load compartment lighting..... 103
Loading information 75
Load-through feature..... 70
Low fuel 91
Luggage floor net..... 73

M
Malfunction indicator light 88
Manual adjustment 39
Manual anti-dazzle 40
Manual transmission 130
Maximum speed limiter..... 138
Messages..... 93
Mirror adjustment 8
Mirrors..... 39, 40
Misted light covers 101

N
New vehicle running-in 118
Number plate light 159

O
Object detection systems..... 138
Odometer 82
Oil..... 149
Oil, engine..... 149, 185, 189
Oil pressure..... 90
Outside temperature 79
Overcab storage 72
Overrun cut-off 121

P
Parking 20, 124
Parking assist 138
Parking brake 131
Particulate filter..... 124
Performing work 148
Phone controls..... 77
Phone holder..... 68
Pollen filter 115
Power button..... 18, 118
Power outlets 80
Power steering fluid..... 151
Power windows 41
Preheating 90, 120
Puncture..... 173

R
Radio Frequency Identification (RFID)..... 204
Radio remote control 22
Rear air conditioning system 109
Rear courtesy lights..... 102
Rear door manual lock..... 25
Rear doors..... 25, 31
Rear fog light 92
Rear fog lights..... 98, 101
Rear heating system 109
Rear parcel shelf..... 72
Rear seats..... 48
Rear view camera 141
Rear windows 42
Rear window wiper/washer 79
Recommended fluids and lubricants 185, 189
Refuelling 143
Remote control..... 22
Reversing light 159
Reversing lights 101
Ride control systems..... 132
Roof load..... 75
Roof rack 74

S
Safety belts..... 51
Safety net 73
Seat adjustment 7, 46

Seat belt 8
Seat belt reminder 87
Seat belts 51
Seat folding 47
Seat heating..... 48
Seat position 45
Seats..... 70
Selective catalytic reduction..... 125
Service 115, 183
Service display 83
Service information 183
Service vehicle soon 88
Side airbag system 58
Sidelights..... 98
Side turn signal lights 158
Sliding door 31
Spare wheel 175
Spare wheel security tool..... 165
Speed limiter..... 81, 138
Speedometer 81
Starting and operating..... 118
Starting off 18
Starting the engine..... 18, 120
Steering..... 117
Steering column controls..... 77
Steering wheel adjustment 9, 77
Steering wheel controls 77
Stop engine..... 88
Stop-start system..... 18, 121
Storage..... 68
Storage box..... 70
Storage compartment..... 69
Storage compartments..... 68
Sun visors 43
Symbols 4

T

Tablet holder..... 68
Tachograph..... 92, 97
Tachometer 82
Tailgate..... 33
Tailgate emergency release..... 33
Tail lights 157
Technical data..... 190
Temporary spare wheel..... 175
Three-point seat belt 52
Toll road stickers..... 41
Tools 165
Top-tether fastening eyes 67
Torx key..... 165
Tow bar..... 144
Towing..... 144, 178
Towing another vehicle 179
Towing a trailer..... 145
Towing eye..... 165, 178
Towing the vehicle 178
Traction Control system 132
Trailer coupling..... 144
Trailer stability assist 145
Trailer towing 145
Transmission 18
Tread depth 169
Trip computer 95
Trip odometer 82
Turbo engine warm-up..... 120
Turn and lane-change signals ... 101
Turn signal 86
Tyre chains 170
Tyre changing..... 173
Tyre designations 166
Tyre pressure 166
Tyre pressure monitoring system..... 90, 168
Tyre pressures 201
Tyre repair kit 171
Tyres 166
Tyres and wheel size, changing. 170

U

Ultrasonic parking assist..... 138
Underseat storage 70
Upholstery..... 181
Upshift..... 89
Using this manual 3

V

Vehicle battery 152, 176
Vehicle checks..... 148
Vehicle data..... 189
Vehicle data recording and privacy..... 204

Vehicle dimensions 195
Vehicle Identification Number 187
Vehicle jack..... 165
Vehicle messages 93
Vehicle security..... 35
Vehicle shutdown 121
Vehicle specific data 3
Vehicle storage..... 147
Vehicle tools..... 165, 178
Vehicle unlocking 6
Vehicle weight 192
Ventilation..... 105

W

Warning chimes 94
Warning lights..... 81
Warning messages..... 93
Warning triangle 74
Washer and wiper systems 16
Washer fluid 152
Washing the vehicle..... 179
Welcome lighting..... 103
Wheel changing 173
Wheel cover hook..... 165
Wheel covers 170
Wheels and tyres 166
Wheel wrench..... 165
Wide view mirror..... 40
Windows..... 41
Windscreen..... 41
Windscreen stickers..... 41
Windscreen wiper/washer 78
Winter tyres 166
Wiper blade replacement 155

www.opel.com

Copyright by ADAM OPEL AG, Rüsselsheim, Germany.

The information contained in this publication is effective as of the date indicated below. Adam Opel AG reserves the right to make changes to the technical specifications, features and design of the vehicles relative to the information in this publication as well as changes to the publication itself.

Edition: February 2016, ADAM OPEL AG, Rüsselsheim.

Printed on chlorine-free bleached paper.

KTA-2769/3-en 02/2016